WBS 2.5
PVC Modules

June 4, 2007

Ken Heller
University of Minnesota

NOνA PVC Module (15,000)

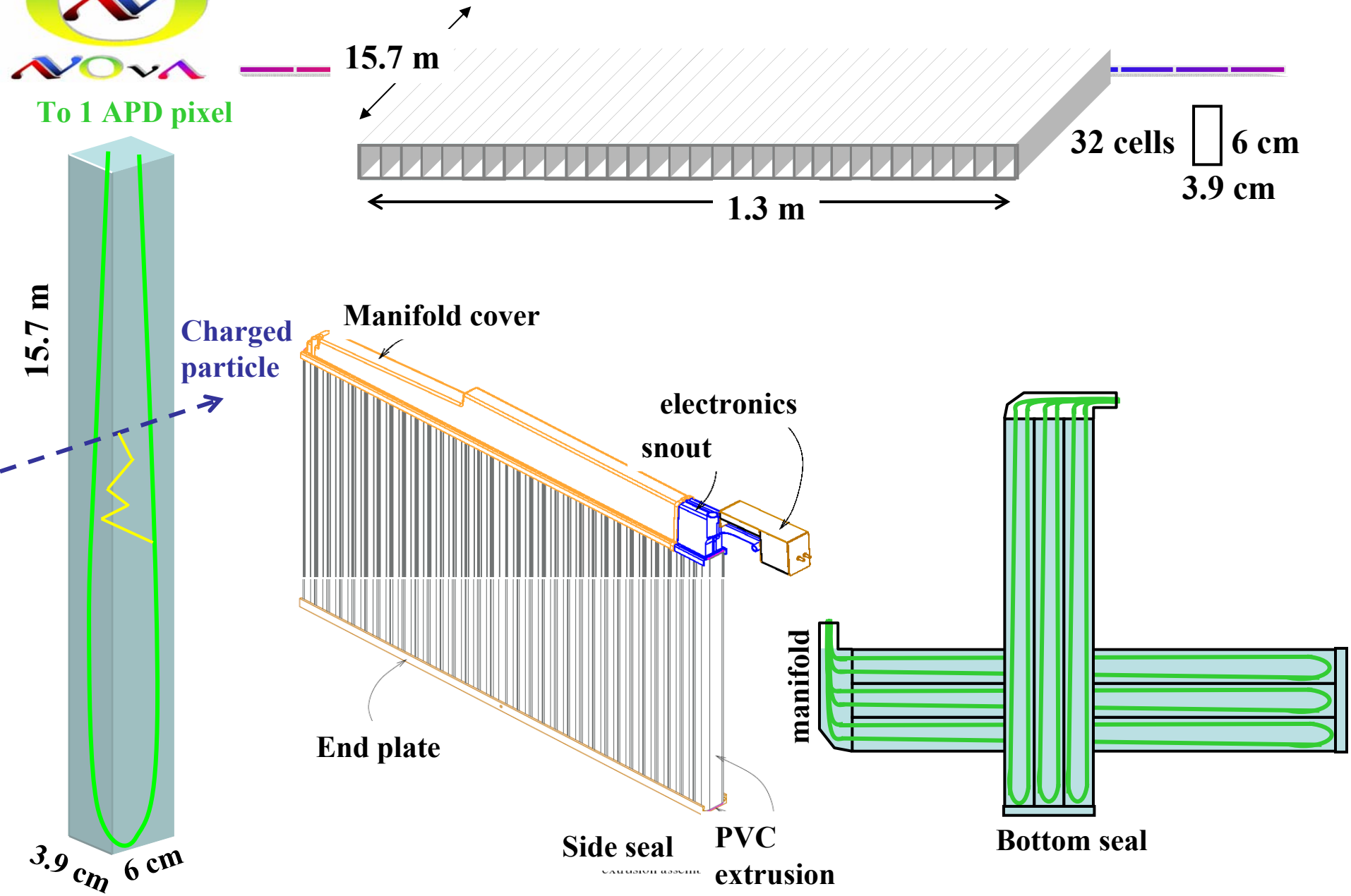

Tasks WBS 2.5

- Design Modules
- Design Factories and Tools to build modules
- Build Factory Machines and Tooling
- Set up Factories
- Build the Modules that make up the detector
  - 14136 Far Detector Modules
  - 496 Near Detector Modules
  - 2 Factories
    - Fermilab
      - Extrusion QA
      - 16 cell extrusion + 16 cell extrusion = 32 cell extrusion assembly
    - Minnesota
      - Extrusions + fiber + end seals = modules
      - Module QA

PVC Modules Organization Chart

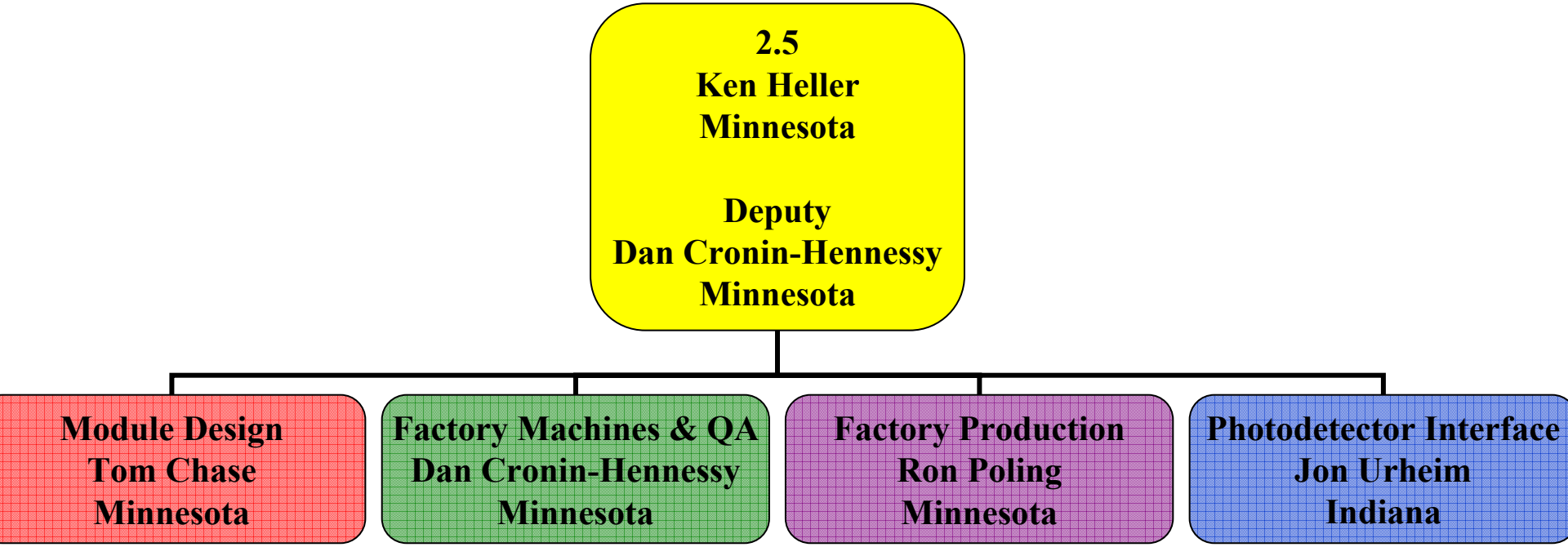

Fermilab Factory - Assembly

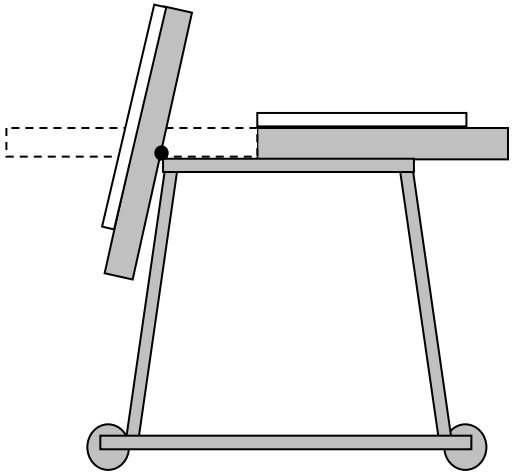

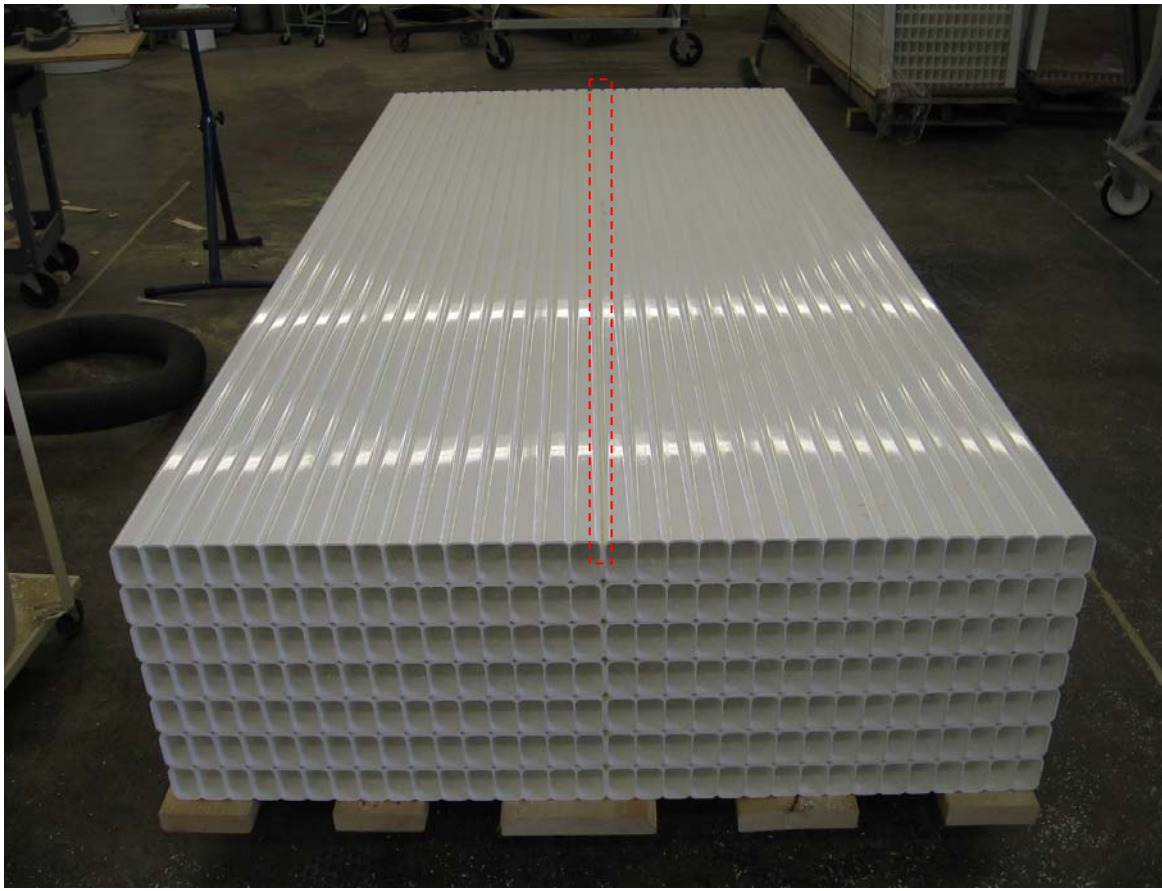

Join two 16 cell extrusions

Fermilab Factory - QA

- **Inspect Extrusions**
  - **Damage**
  - **Dimensions**
  - **Structural Strength**

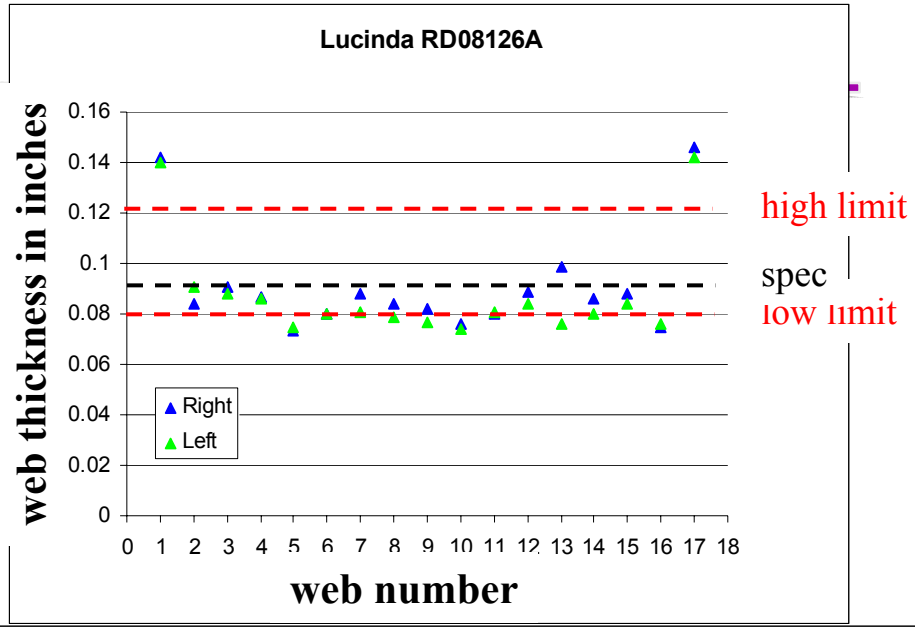

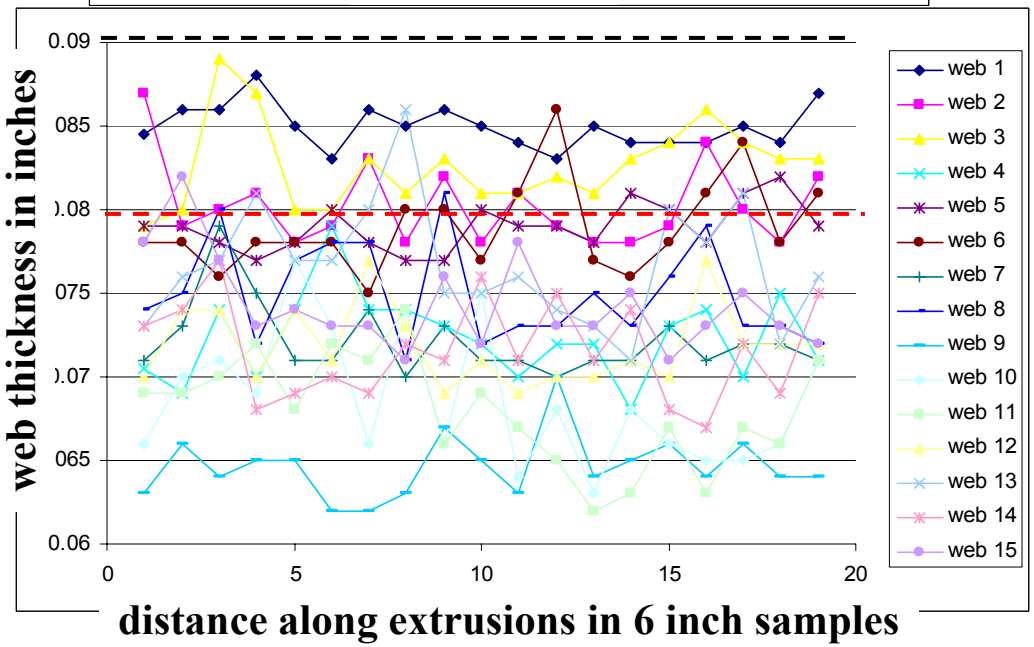

Fermilab Factory Layout

8400 sq ft

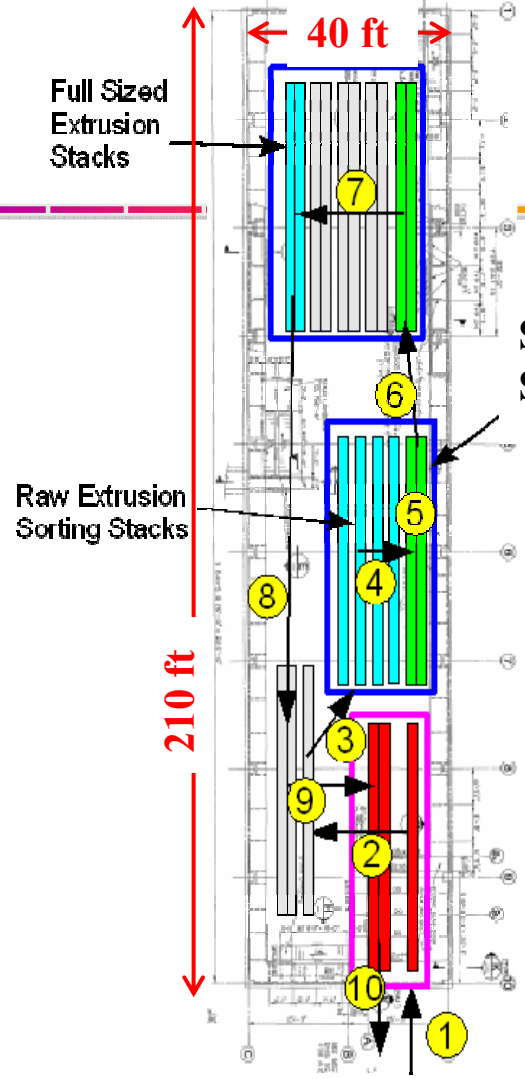

- Single module on Rolling Gluing Table
- Full Stack
- Partial stack
- Open slot
- Occupied Slot
- Crane bay
- Loading dock platform (ground level)

Wide Band Lab

2.4 person hr/module

+ inefficiency

3.1 person hr/module

Minnesota Factory - Assembly

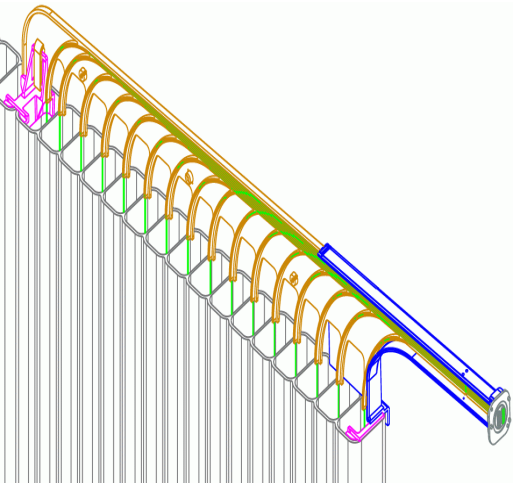

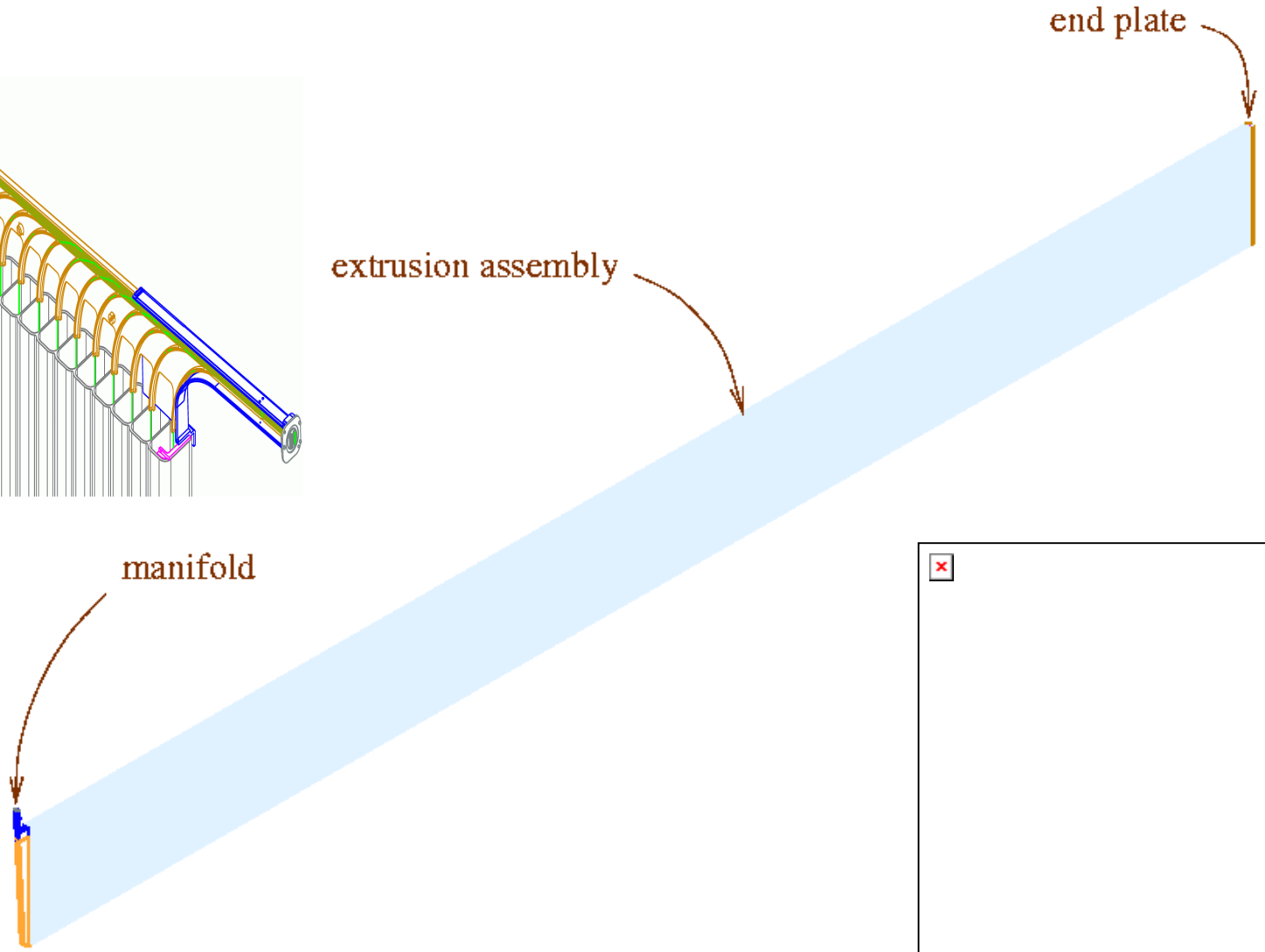

Manifold – fiber guide, liquid filling, expansion volume, photodetector interface

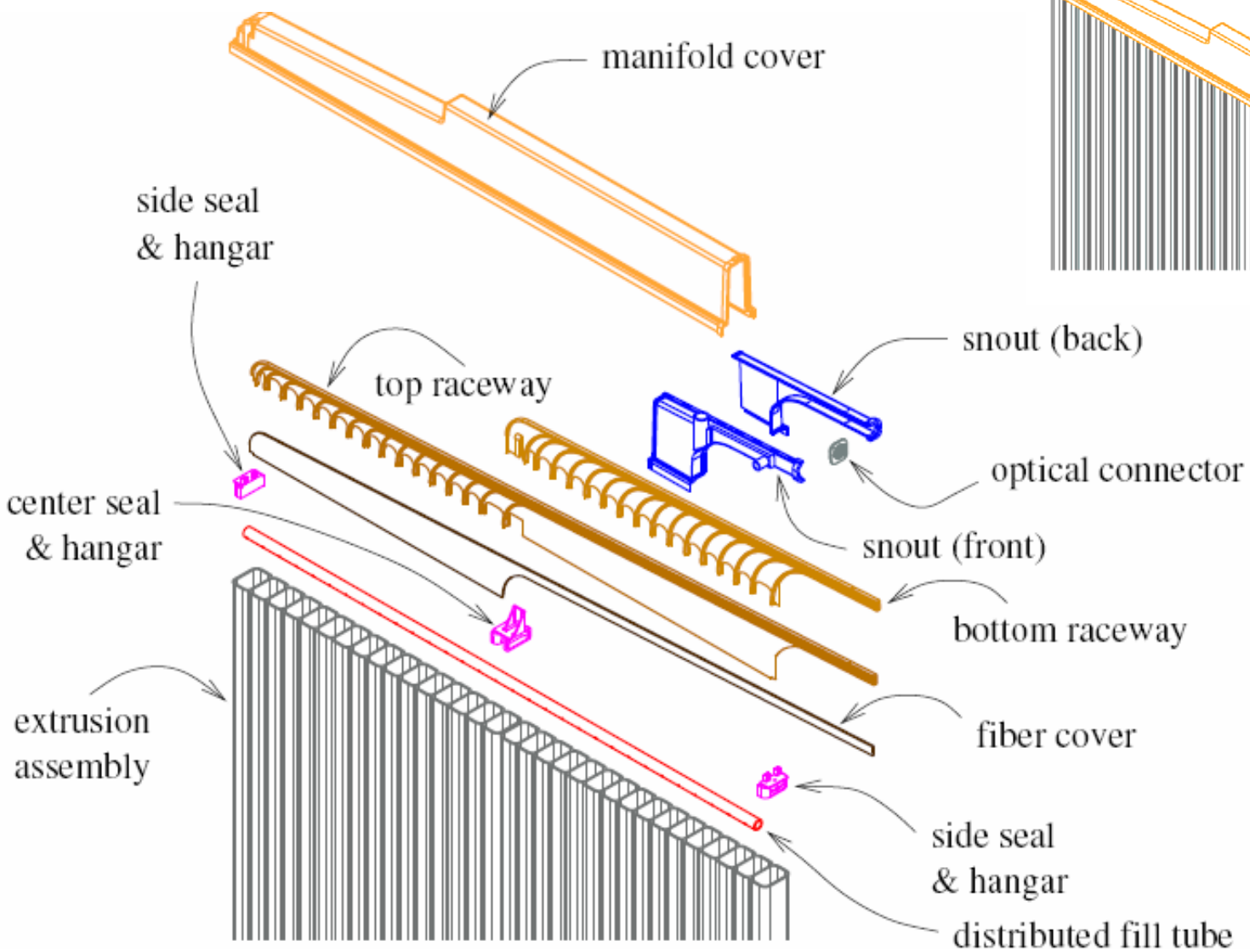

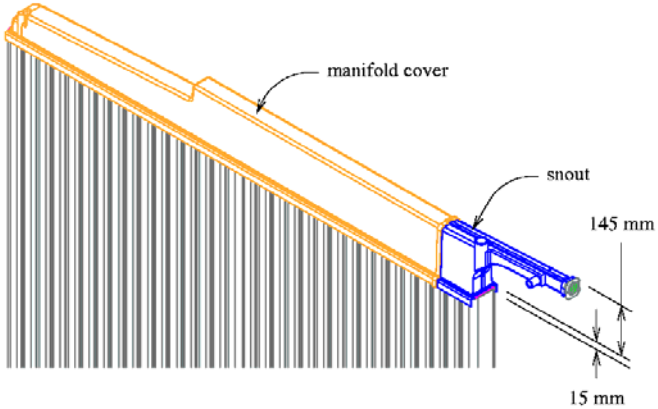

Minnesota Factory Stringing Fiber

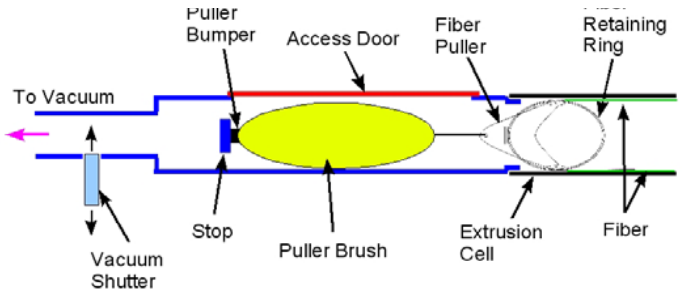

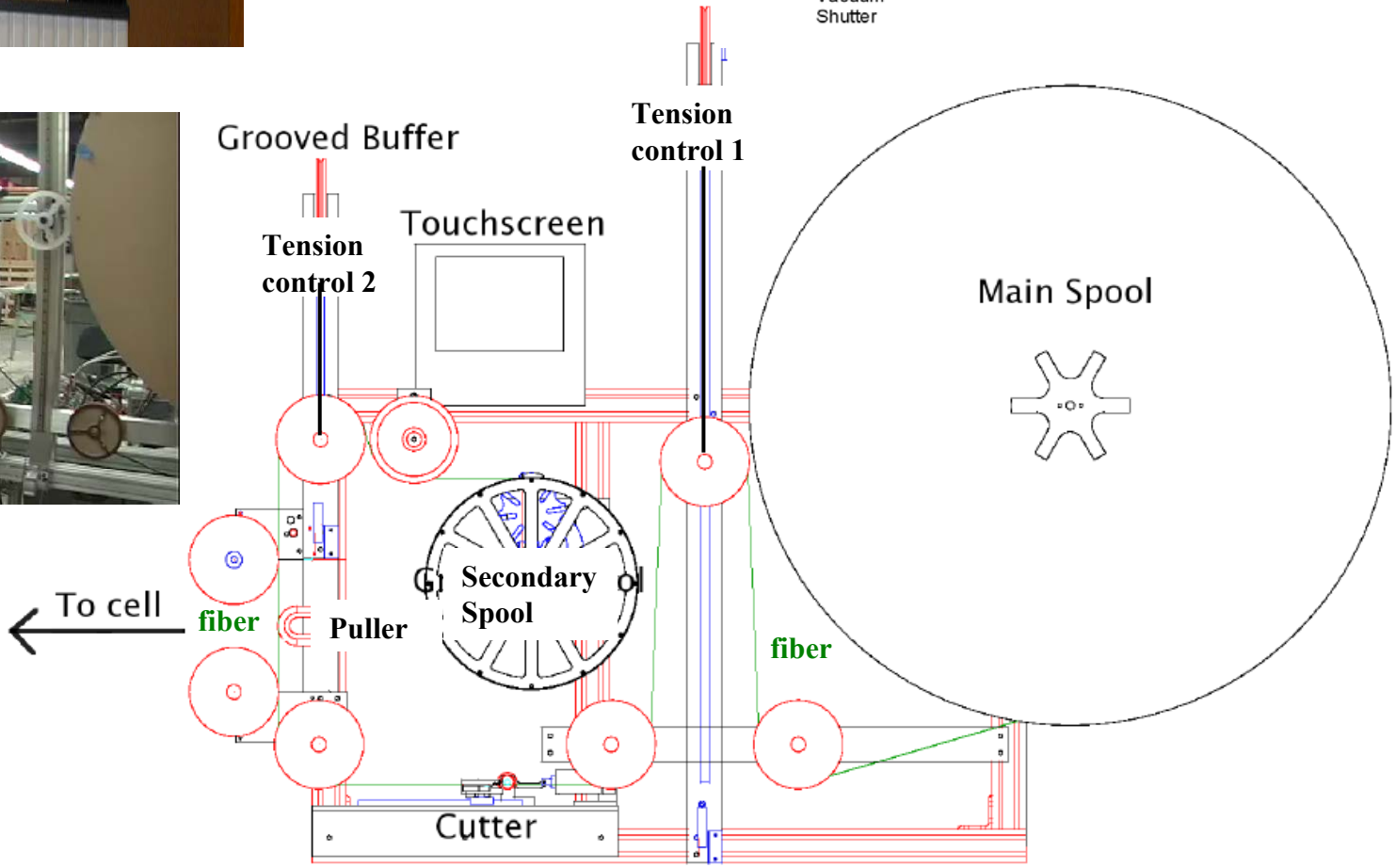

Minnesota Factory - Glue

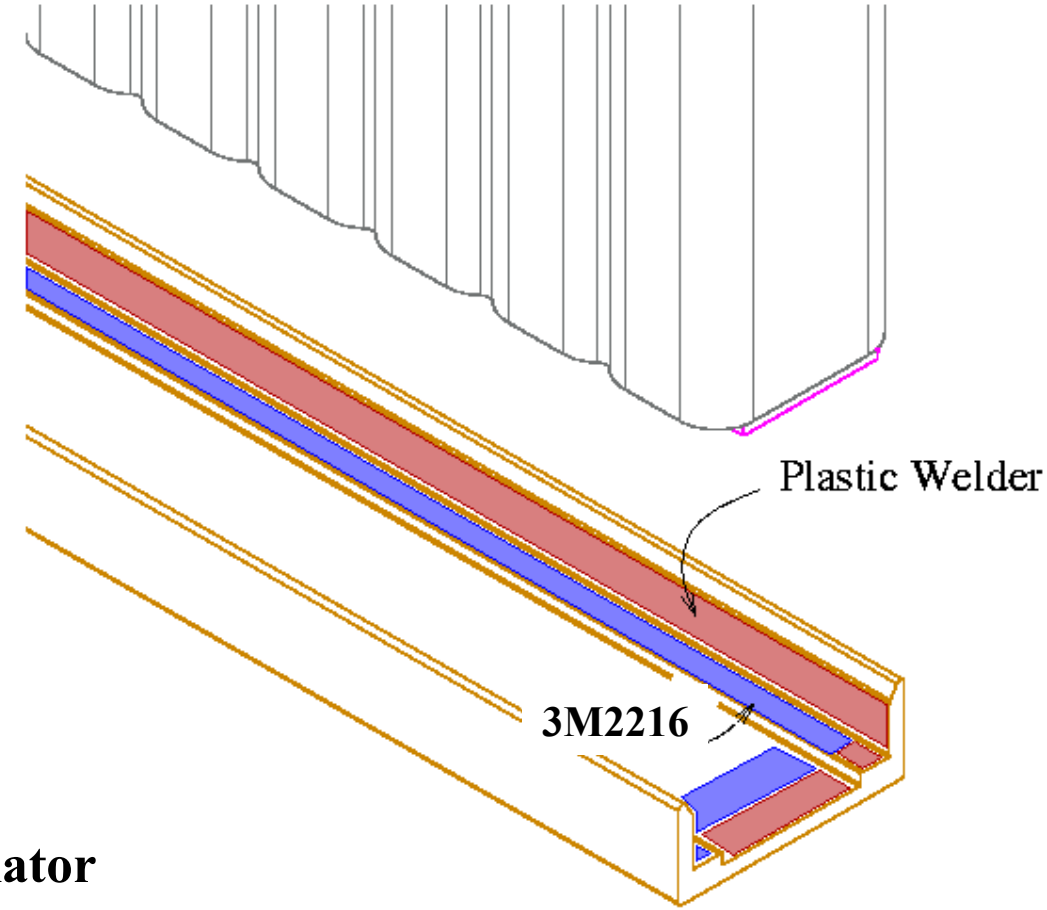

Chemically inert – 3M2216
Contact with Scintillator
Structurally strong – Plastic Welder
No Contact with Scintillator

Minnesota Factory QA – Leaks, Fiber Damage

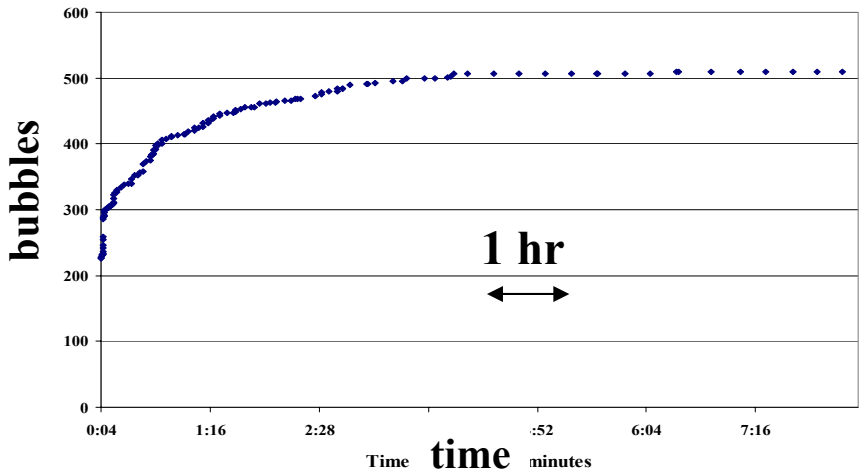

Full length module no leak

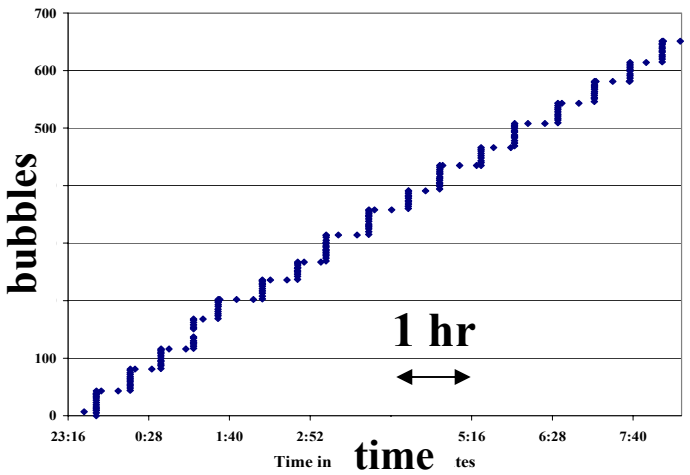

Full length module 6 μm leak

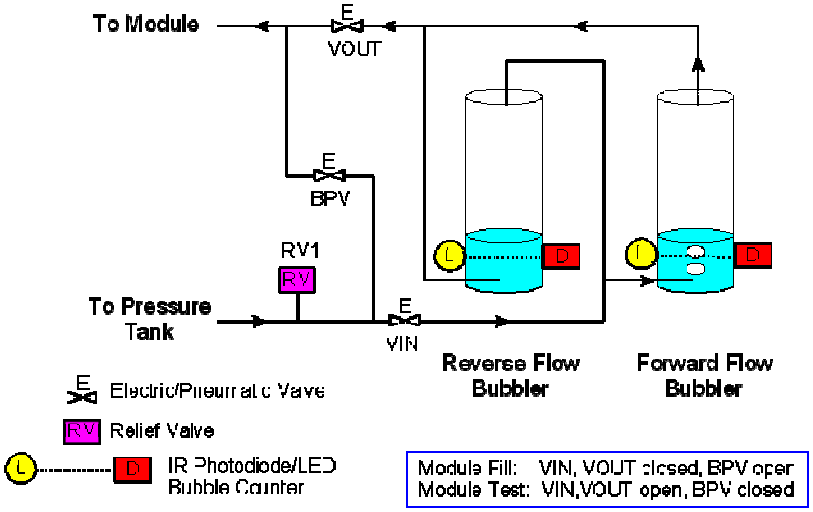

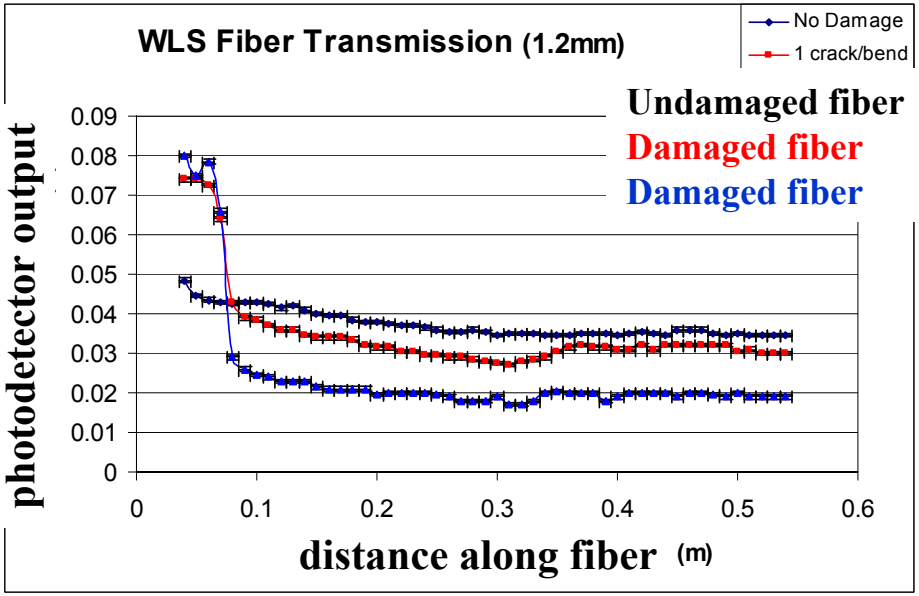

253 ft

245 ft

Threading 2

Threading 1

CEILING HEIGHTS:
26'-0" TO DECK
23'-8" TO JOISTS

OFFICES: 2x2
ACT CEILING
@ 9'0"

Gluing/
Receiving 1

Gluing/
Receiving 2

Testing

Shipping 1

Shipping 2

1 2 3 3 4 5 6

56000 sq ft

Single module on rolling table
Full or partial stack + spacers
Stack of 8 (or less) + 3" spacers
Open slot for rolling table
Crane bay
Stringing machine

Minnesota Factory Layout

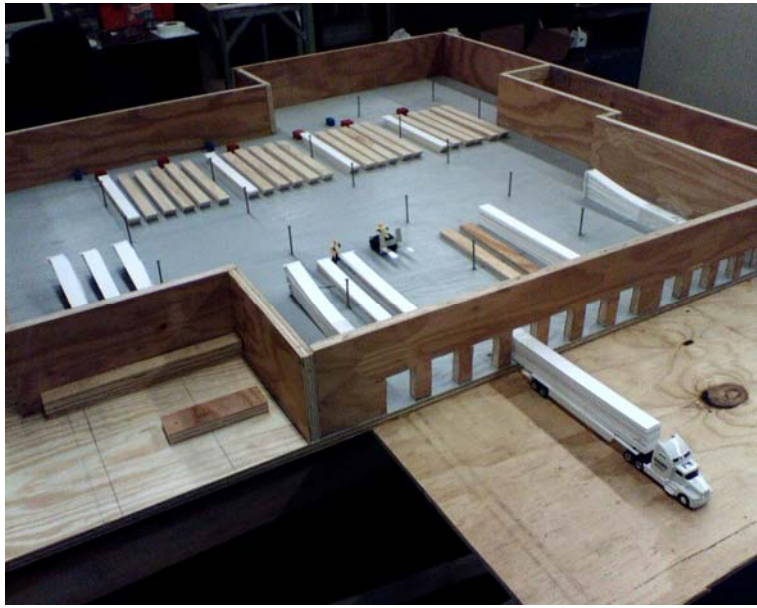

3.9 person hr/module + inefficiency

5.2 person hr/module

Factory Machines

Assembly Machines

- Fiber Stringing – Build
- Tables - Build
- Gluing – Purchase
  - Glue for assembly - Purchase
- Fly cutter – Purchase
- Crane and lifting - Purchase
- Air Lifter and moving - Purchase

Ken Heller

Cost: WBS 2.5 PVC Modules

WBS x.5 PVC Modules	Estimated Cost (AY $M)	Contingency Estimate (AY $M)	Contingency (%)	Total Cost (AY $M)
Construction w indirects				
M&S	6.8	2.0	29%	8.8
Labor[1]	8.6	3.7	43%	12.3
Construction total:	**15.4**	**5.7**	**37%**	**21.1**
R&D				
M&S	0.6	0.0	0%	0.6
Labor[1]	0.5	0.0	0%	0.5
R&D total:	**1.1**	**0.0**	**0%**	**1.1**

[1] Labor costs presented here include all project labor from Fermilab, other DOE facilities, and Universities.

- **Cost Drivers (Base)**
  - **Manufactured parts: $2 M ($130/module)**
  - **Module assembly labor: $6 M ($400/module) [45% measured]**
  - **Shipping: $0.8M ($50/module)**
  - **Factory infrastructure: $ 1.4 M operating + $1.7 M tooling = $3.1 M**

Schedule: WBS 2.5

Nova Project
WBS x.5- Nova_Milestones_PVC_Modules
Milestone Gantt Chart

Activity ID	Milestone Description	Date
2.5 -- PVC Modules		
2.5.1.1.5	Manifold production purchase orders released	22Aug08
2.5.3.3.1.1	Factory 1 (FNAL) ready for NOVA project occupancy	01Oct08
2.5.1.2.5	End plate and seals production purchase orders released	20Oct08
2.5.2.5	Optical connector production purchase order released	17Dec08
2.5.3.3.1.4	Local storage space (FNAL) ready for NOVA project occupancy	30Dec08
2.5.3.3.2.7.10	Factory 2 (UMNTC) ready for module production	08May09
2.5.3.3.1.7.8	Factory 1 (FNAL) ready for module production	29Jun09
2.5.3.4.2.45.44	Far detector module assembly started	09Nov09
2.5.3.4.3.25	Near detector module fabrication started	29Oct10
2.5.3.4.3.80	All near detector modules completed	29Dec10
2.5.3.4.2.45.45	Far detector modules for superblock 1 completed	01Feb11
2.5.3.4.2.45.50	Far detector modules for superblock 2 completed	12May11
2.5.3.4.2.45.60	Far detector modules for superblock 3 completed	24Aug11
2.5.3.4.2.45.70	Far detector modules for superblock 4 completed	07Dec11
2.5.3.4.2.45.80	Far detector modules for superblock 5 completed	23Mar12
2.5.3.4.2.45.90	Far detector modules for superblock 6 completed	05Jul12
2.5.3.4.2.45.100	Far detector modules for superblock 7 completed	16Oct12
2.5.3.4.2.45.110	Far detector modules for superblock 8 completed	19Dec12
2.5.3.4.2.45.120	All far detector modules completed	19Dec12

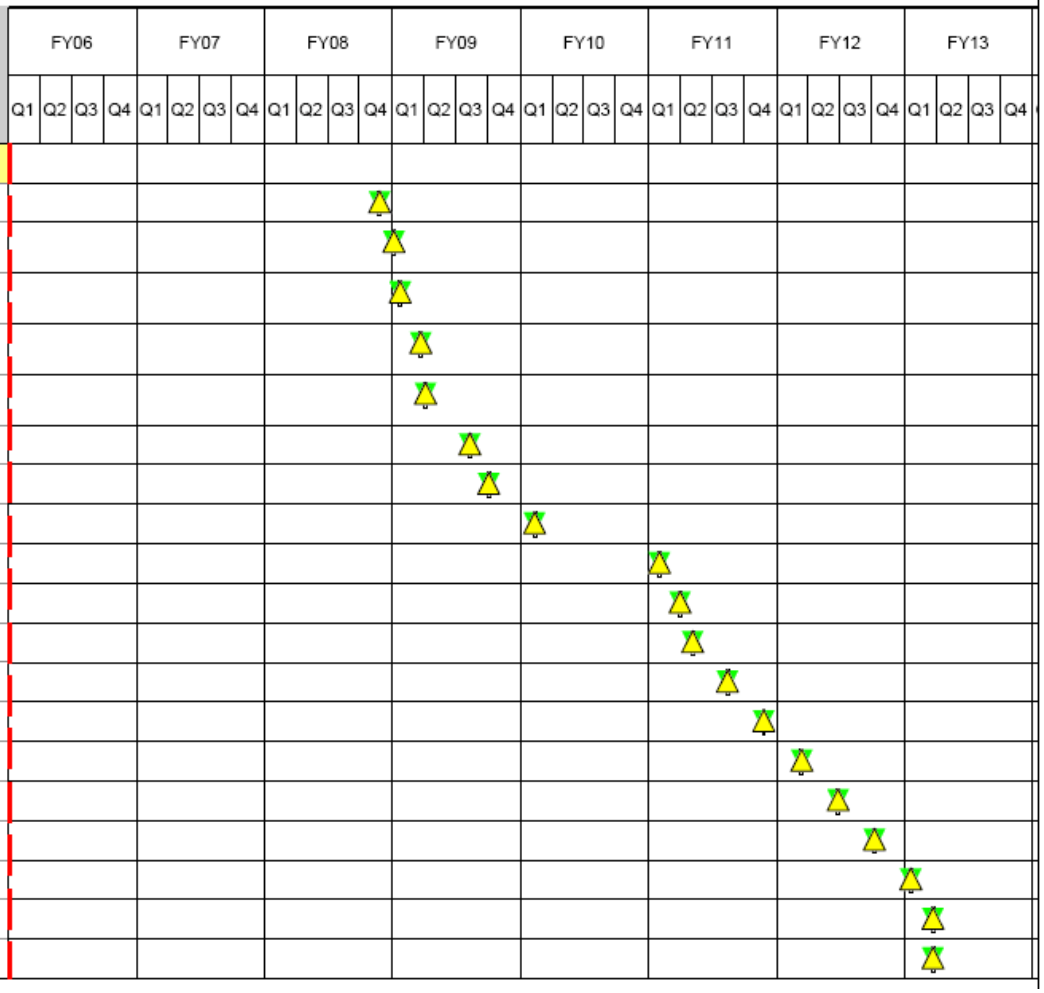

Manpower

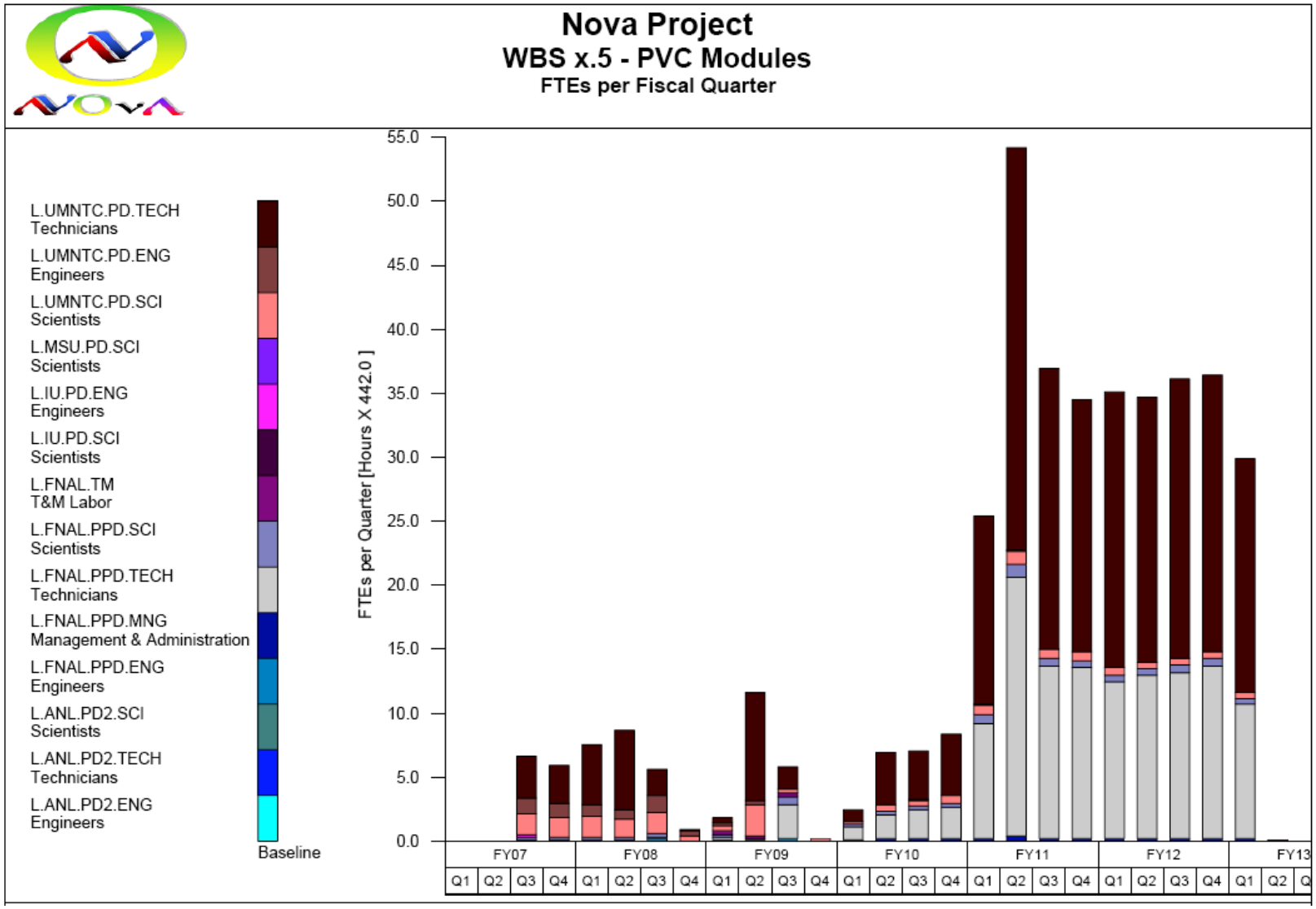
Nova Project
WBS x.5 - PVC Modules
FTEs per Fiscal Quarter
L.UMNTC.PD.TECH Technicians
L.UMNTC.PD.ENG Engineers
L.UMNTC.PD.SCI Scientists
L.MSU.PD.SCI Scientists
L.IU.PD.ENG Engineers
L.IU.PD.SCI Scientists
L.FNAL.TM T&M Labor
L.FNAL.PPD.SCI Scientists
L.FNAL.PPD.TECH Technicians
L.FNAL.PPD.MNG Management & Administration
L.FNAL.PPD.ENG Engineers
L.ANL.PD2.SCI Scientists
L.ANL.PD2.TECH Technicians
L.ANL.PD2.ENG Engineers
Baseline
FTEs per Quarter [Hours X 442.0]
55.0
50.0
45.0
40.0
35.0
30.0
25.0
20.0
15.0
10.0
5.0
0.0
FY07
FY08
FY09
FY10
FY11
FY12
FY13
Q1 Q2 Q3 Q4

Health & Safety

- Lifting heavy extrusions (900 lbs each)
  - Lifting fixtures
  - Training
- Glue fumes
  - Small quantities
  - Good ventilation

Risks & QC

Extrusion quality

- Dimensions
- Structural strength
- Reflectivity

Extrusion Manufacture & Fermilab Factory QC

Assembly quality

- Fiber damage
- Leaks

Minnesota Factory QC

Delivery schedule interruptions

- 10 week extrusion storage buffer
- 4 week module storage buffer
- Work weekends (40% increase)

Both Factories

Summary

- PVC Modules are designed and tested that are both detector elements and structural elements.
- 2 glue solution gives structural strength and no interaction with scintillator
- Factory procedures will produce modules at a rate that meets funding profile and installation capabilities.
- QA procedures to detect extrusion defects, fiber damage, and possible leaks due to assembly faults (all will be very rare)
- No CD-3a items in this WBS