Transfer Line Design
(WBS x.0.1)

June 5, 2007

Dan Broemmelsiek

High Points

- **Contents**
  - Injection Line
  - Extraction Line
  - RR30 Straight
  - Abort Line
- **Messages**
  - Designs finalized
  - Interferences known
  - 3D drawings underway
  - Essentially ready for detailed engineering
  - Standard design
- **Documentation**
  - 1531-v1 Magnet and Instrumentation Counts for NOvA Recycler
  - 1529-v1 Recycler Abort Line with Gap Clearing Kickers for the Nova
  - 1501-v1 Recycler Injection Line Options for the NOvA Project
  - 1495-v1 Recycler Injection Kicker Configuration in the NOvA
  - 1596-v5 Specification for NOvA kickers
  - 1816-v1 Update of Extraction Line Design From Recycler To Main Injector

Injection Line Diagram

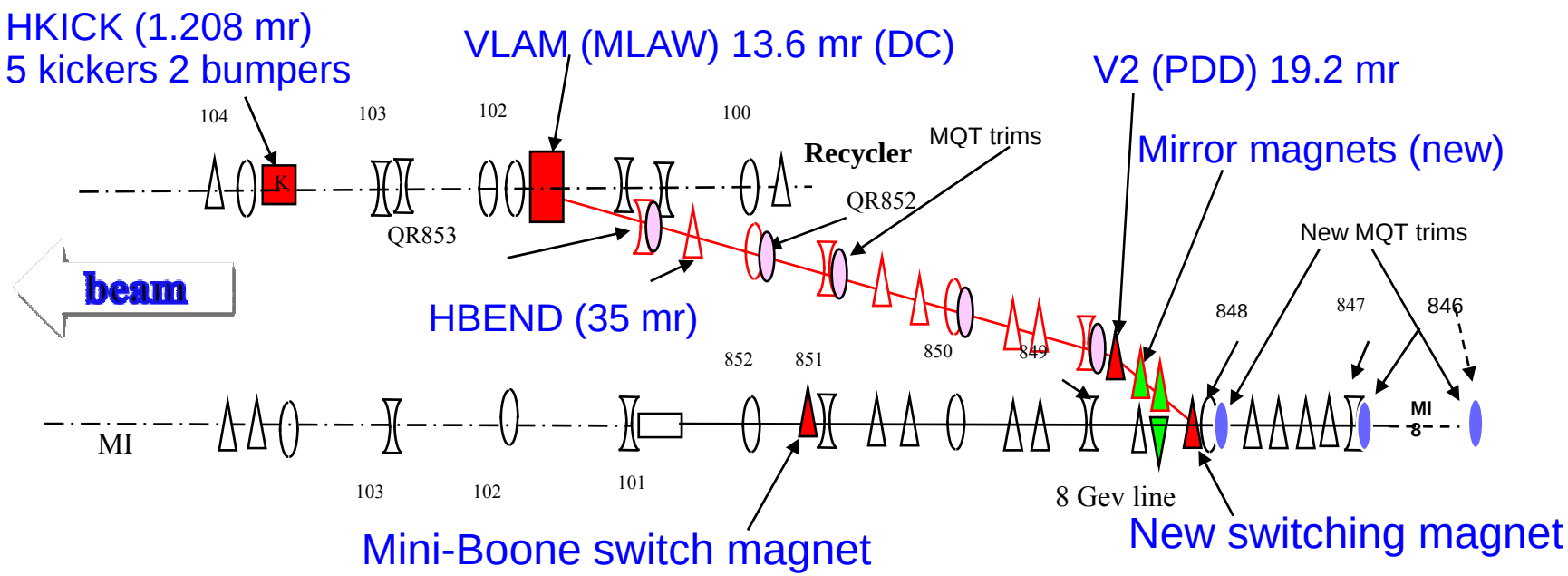

- Keep ability to transfer from MI-8 into MI and MiniBoone
- Vertical switching magnet
- Mirror dipoles – permanent magnets
- Keep magnetic fields away from RR
- MLA vertical injection Lambertson – cancels vertical dispersion from switching magnet
- Injection kicker – horizontal

  Required kick implies 5 kicker and 2 bumper magnets

Injection Line Matching

- Modification to 8GeV line
  - 846(847)
    - Replace LEP corrector with HDC(VDC)
    - Add ramped MQT
  - 848
    - Replace LEP corrector with HDC
    - Add ramped MQT
    - Shift BPM upstream
    - Install ADCW 10” downstream of SQA steel
  - 849
    - Shift quad downstream by 80”
    - Move PDD-040 to “upper” line and replace with PDD_M magnet
- 3 way matching (MI, MiniBoone, RR) studied

Injection Line Magnets

Type	Comment	Total	Modify	Construct	Recycle
	Permanent Magnets				
RQMx	Recycler style 20 in. permanent magnet quad	14	14	0	0
PDD_M	PDD mirror magnet, new design	3	0	3	0
PDD	PDD 8 GeV style double dipole, existing style	5	0	3	2*
PDD_R	PDD dipole design, reduced field	2	0	2	0
MGS	Recycler dispersion suppressor mirror magnet	0	0	0	0
	Powered Elements				
ADCW	Modified B1 style to open aperture	1	1	0	0
MLAW	MI style injection Lambertson, new,modified	1	0	1	0
ILA	MI style Lambertson, existing, move	0	0	0	0
	Trim Elements				
MQT	Old MR style quad trim	13	0	0	13
HDC	Old MR style horizontal corrector used in Recycler	2	0	0	2
VDC	Old MR style vertical corrector used in Recycler	2	0	0	2
MCH	LEP Horizontal corrector	2	0	0	2
MCV	LEP vertical corrector	2	0	0	2

- New/Modified Magnets
- Rotated/Modified Lambertson

Solid Lines: 6σ

Dashed Lines: 10 σ

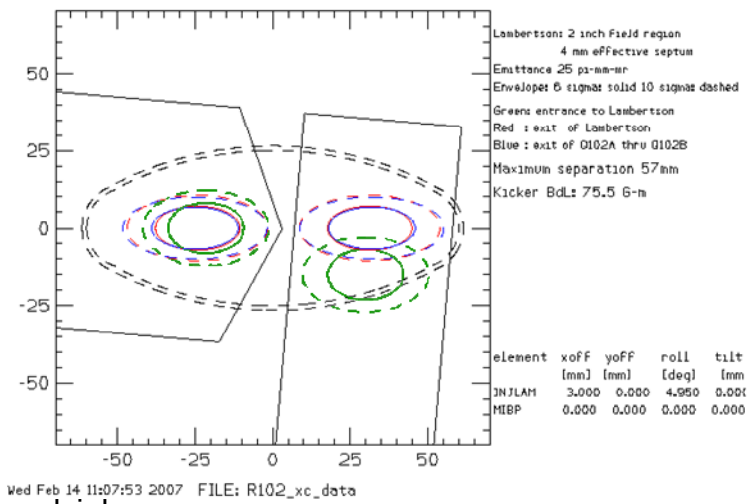

Injection Line Apertures

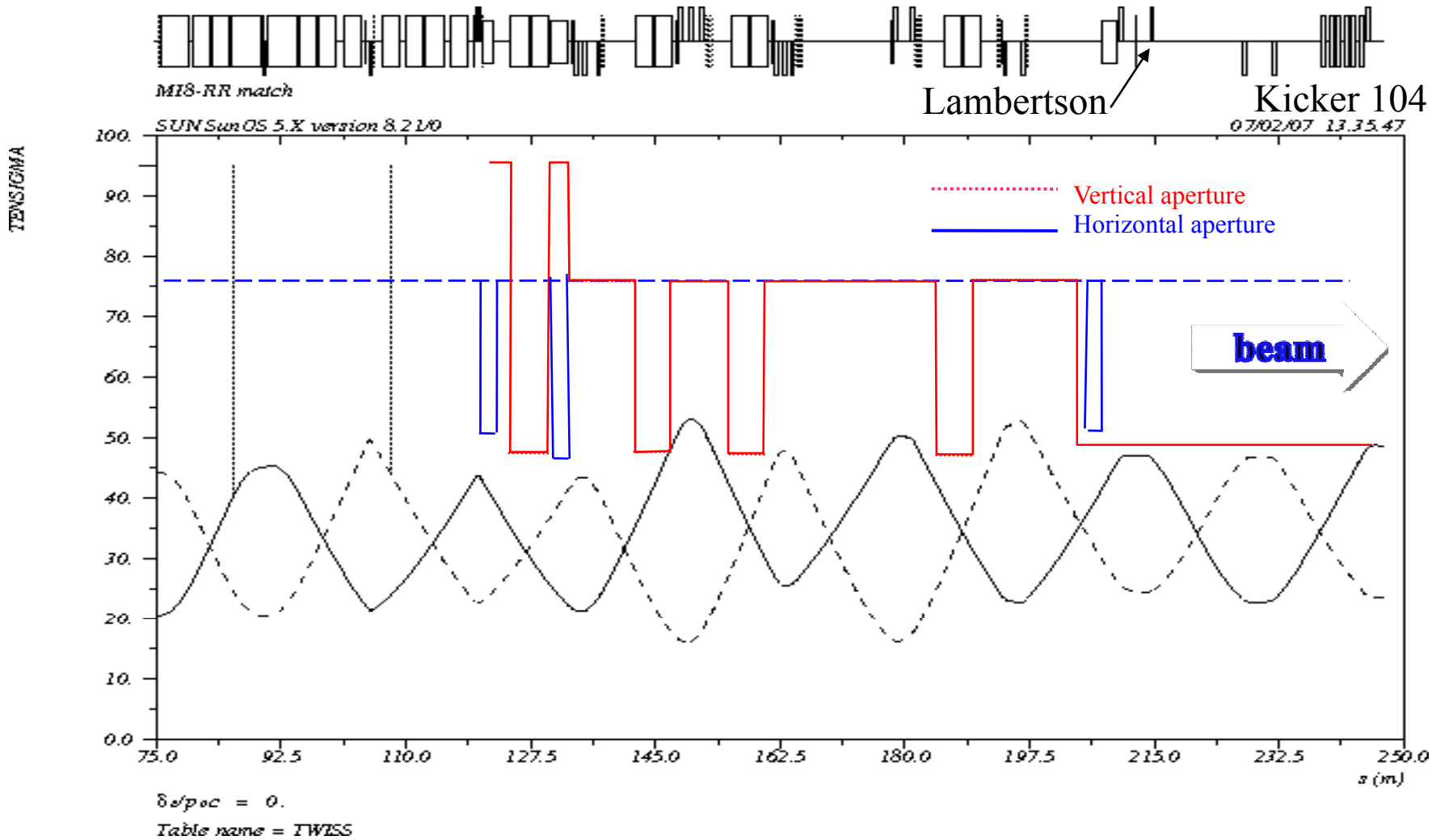

Extraction Line Diagram

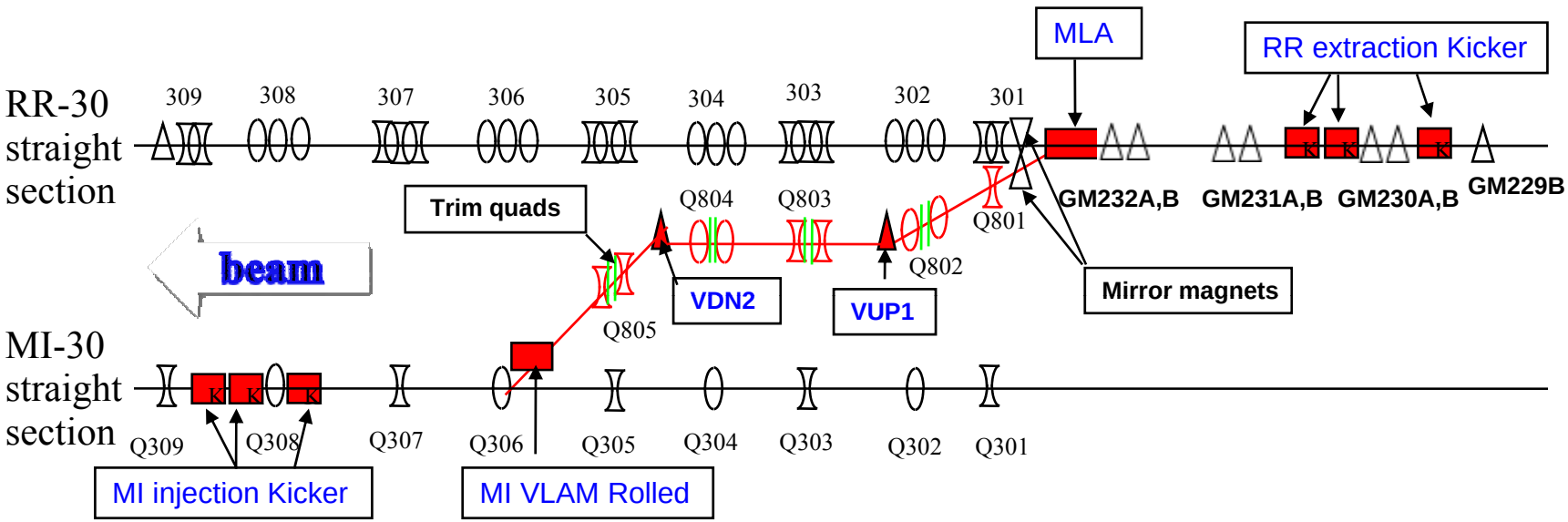

- Extraction line redesigned to reduce required kicker strength by extending the whole line by a cell.
- 8GeV Lamberston used for initial vertical bend.
- Apertures at Lambertsons and Kickers fit 20pi-10sigma beam envelope.

Extraction Line Magnets

Type	Comment	Total	Modify	Construct	Recycle
	Permanent Magnets				
RQMx	Recycler style 20 in. permanent magnet quad	9	9	0	0
PDD_M	PDD mirror magnet, new design	0	0	0	0
PDD	PDD 8 GeV style double dipole, existing style	0	0	0	0
PDD_R	PDD dipole design, reduced field	0	0	0	0
MGS	Recycler dispersion suppressor mirror magnet	1	0	0	1*
	Powered Elements				
ADCW	Modified B1 style to open aperture	2	2	0	0
MLAW	MI style injection Lambertson, new,modified	1	0	1	0
ILA	MI style Lambertson	1	0	0	1
	Trim Elements				
MQT	Old MR style quad trim	10	0	0	10
HDC	Old MR style horizontal corrector used in Recycler	2	0	0	2
VDC	Old MR style vertical corrector used in Recycler	3	0	0	3
MCH	LEP Horizontal corrector	0	0	0	0
MCV	LEP vertical corrector	0	0	0	0

RR30 Straight

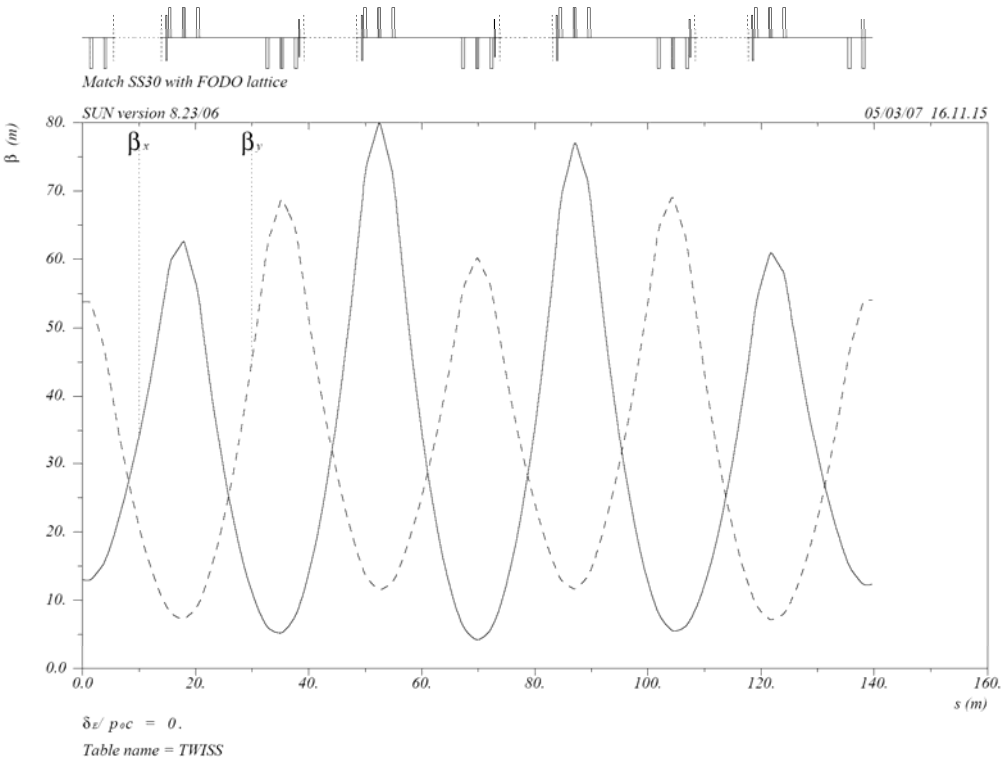

- New solution
  - 3 permanent quads/half-cell
    - Max. beta function < 80m
    - Quad strength < 10-30% standard
- New Recycler lattice
  - Model tunes 25.425(H), 24.415(V)

RR30 Straight Magnets

Type	Comment	Total	Modify	Construct	Recycle
	Permanent Magnets				
RQMx	Recycler style 20 in. permanent magnet quad	25	25	0	0
PDD_M	PDD mirror magnet, new design	0	0	0	0
PDD	PDD 8 Gev style double dipole, existing style	0	0	0	0
PDD_R	PDD dipole design, reduced field	0	0	0	0
MGS	Recycler dispersion suppressor mirror magnet	1	0	0	1
ADCW	Modified B1 style to open aperture	0	0	0	0
MLA	MI style injection Lambertson, new,modified	0	0	0	0
ILA	MI style Lambertson	0	0	0	0
	Trim Elements				
MQT	Old MR style quad trim	0	0	0	0
HDC	Old MR style horizontal corrector used in Recycler	4	0	0	4
VDC	Old MR style verticall corrector used in Recycler	4	0	0	4
MCH	LEP Horizontal corrector	0	0	0	0
MCV	LEP vertical corrector	0	0	0	0

- One new RQMx built
- Still pursuing R&D on higher gradient RQM
  - Fewer magnets => less money and time

RR Abort

- Recycler shares abort beam absorber with MI
- Current abort kicker does double duty
  - Proton abort
  - Pbar extraction
- Need gap clearing kickers
  - Clear injection gap cleanly on absorber

New Abort Configuration

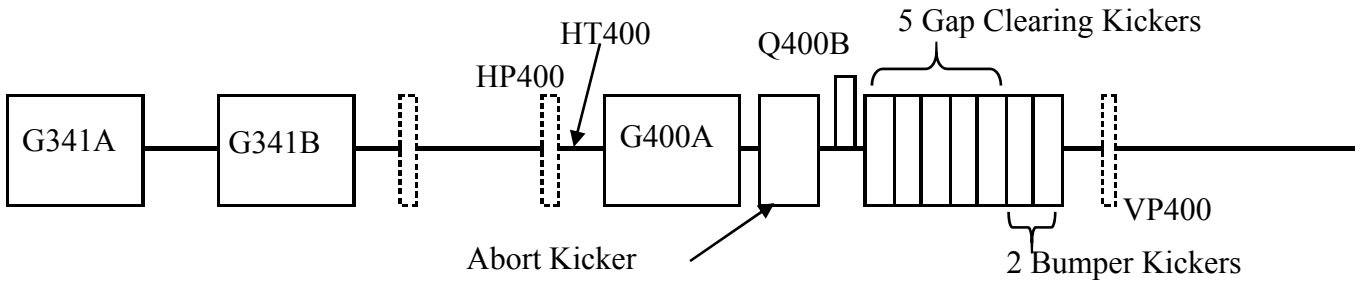

- Move abort kicker between G400A and Q400B
- Install Gap clearing kickers downstream of Q400B
- Fit to same position at entrance to Lambertson with both kickers=>
- Difference in angle at entrance to Lambertson 100 ur => 0.3 mm difference at Lambertson exit
- Abort kicker nominal angle 1.07 mr and full turn kicker (>9.5 us) @ 0.77 Hz
- Gap clearing: nominal angle 1.18 mr with ~1.6 us flattop / 57ns rise/fall @ 15 Hz

Summary

- Transfer Lines, RR30 and Abort designed
  - Apertures and Lattice Matching modeled
- Initial interferences found are minor
  - 3D drawings exist
- Magnets and power supplies are specified
  - All well within existing capabilities
- Near Term Work
  - Tunnel/Utility interferences
    - Stake-out during next AD shutdown
  - Stand design
  - Vacuum system