Photodetector Interface
(WBS 2.5.2)

June 5, 2007

Jon Urheim

Use of APDs for NOνA

- Why?
  - Cost: APD's are cheap
    Note: **Baseline Detector has 452,352 channels to read out !**
  - Performance: **High Quantum Effcy (~85%) + Gain (~100) suitable for low light levels (~30 photons from far end of cell)**
  - Compact, robust, modest bias voltage (~400 V)
  - ***But, must be cooled (-15 C) to achieve acceptable noise levels***

- APD Readout for NOνA
  - Custom 32-channel ***APD array*** from Hamamatsu, bump-bonded to printed circuit ***carrier board*** to read out each Scintillator Module.
  - The ***APD Module*** consists of this plus the enclosure/interface for a single APD array/carrier board assembly.
  - The ***Optical Connector*** that houses the 64 fiber-ends is a part of the Scintillator Module. It plugs into the APD Module.

APD Pixel Layout (in mm)

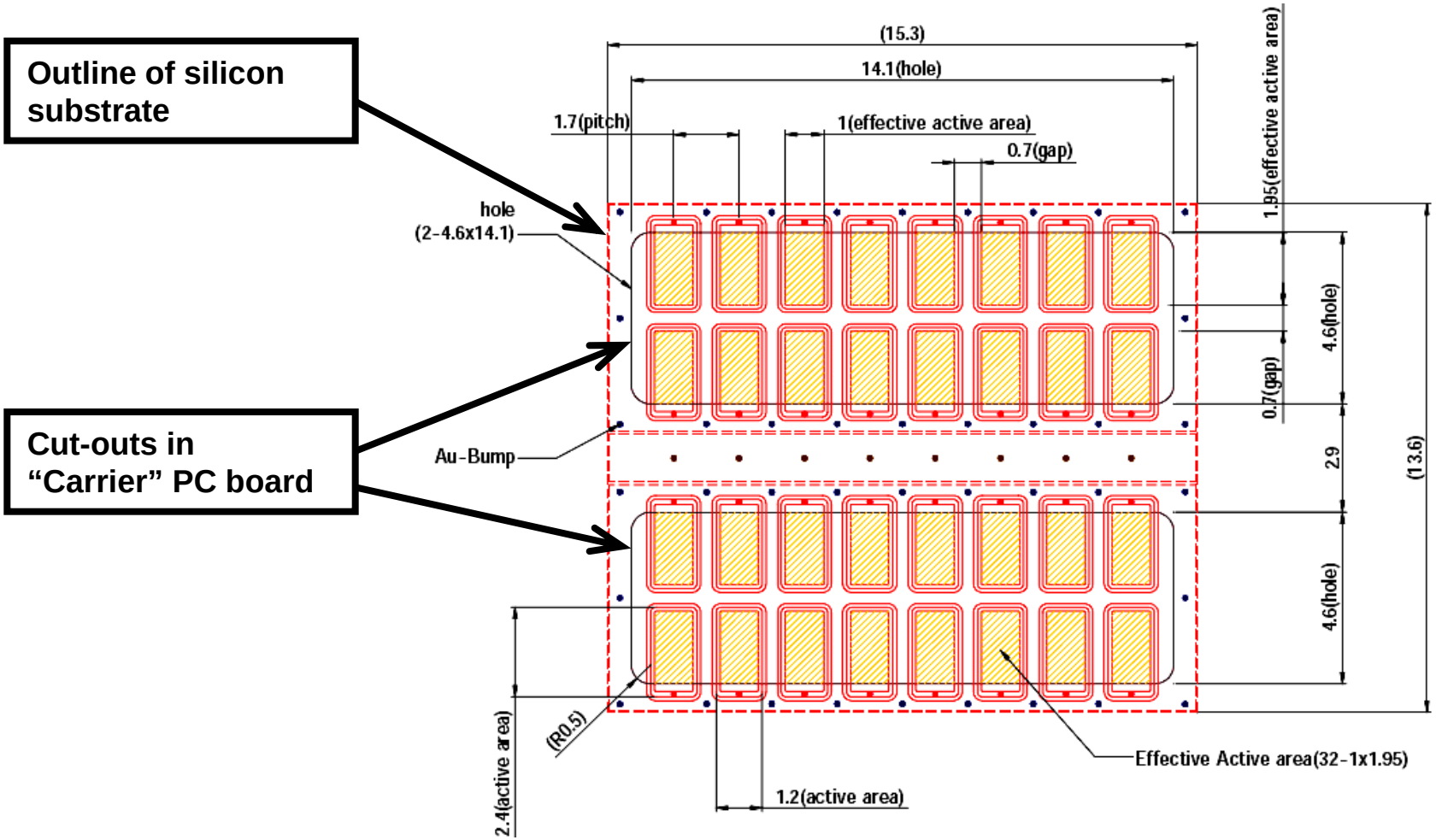

APD Array from Hamamatsu

- Si Avalanche Photodiode Array
  - Custom design to match to fiber aspect ratio
  - Bare die mounted to PCB via gold bump thermo-compression
  - Optical surface oriented face-down on board.

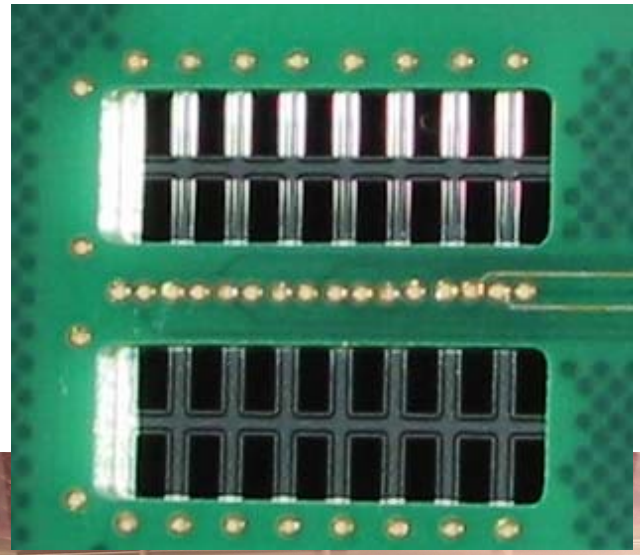

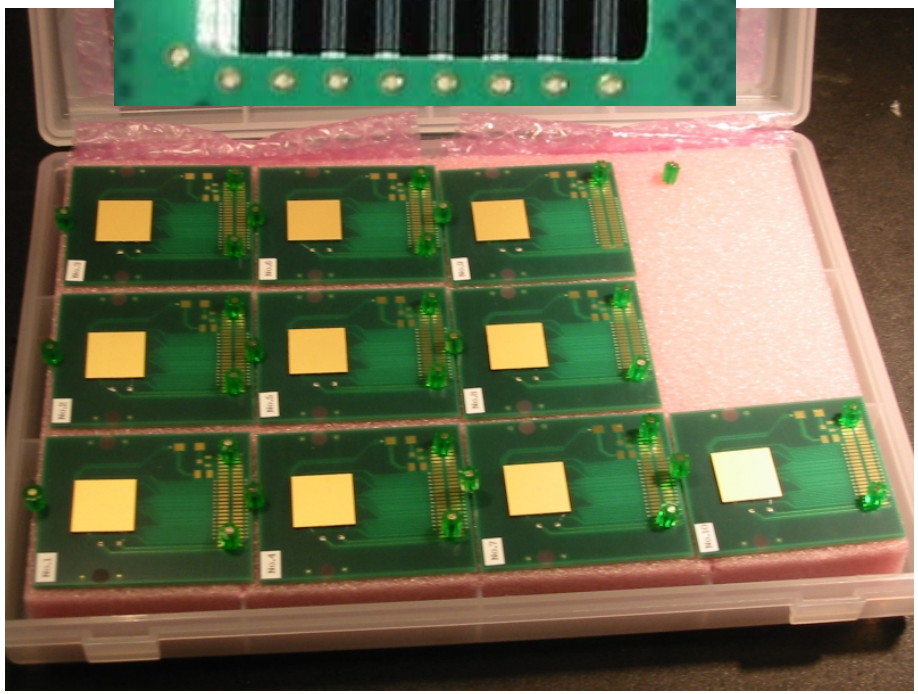

Where the APD Module Goes

NOvA Liquid Scintillator Module Manifold (T. Chase, U MN)

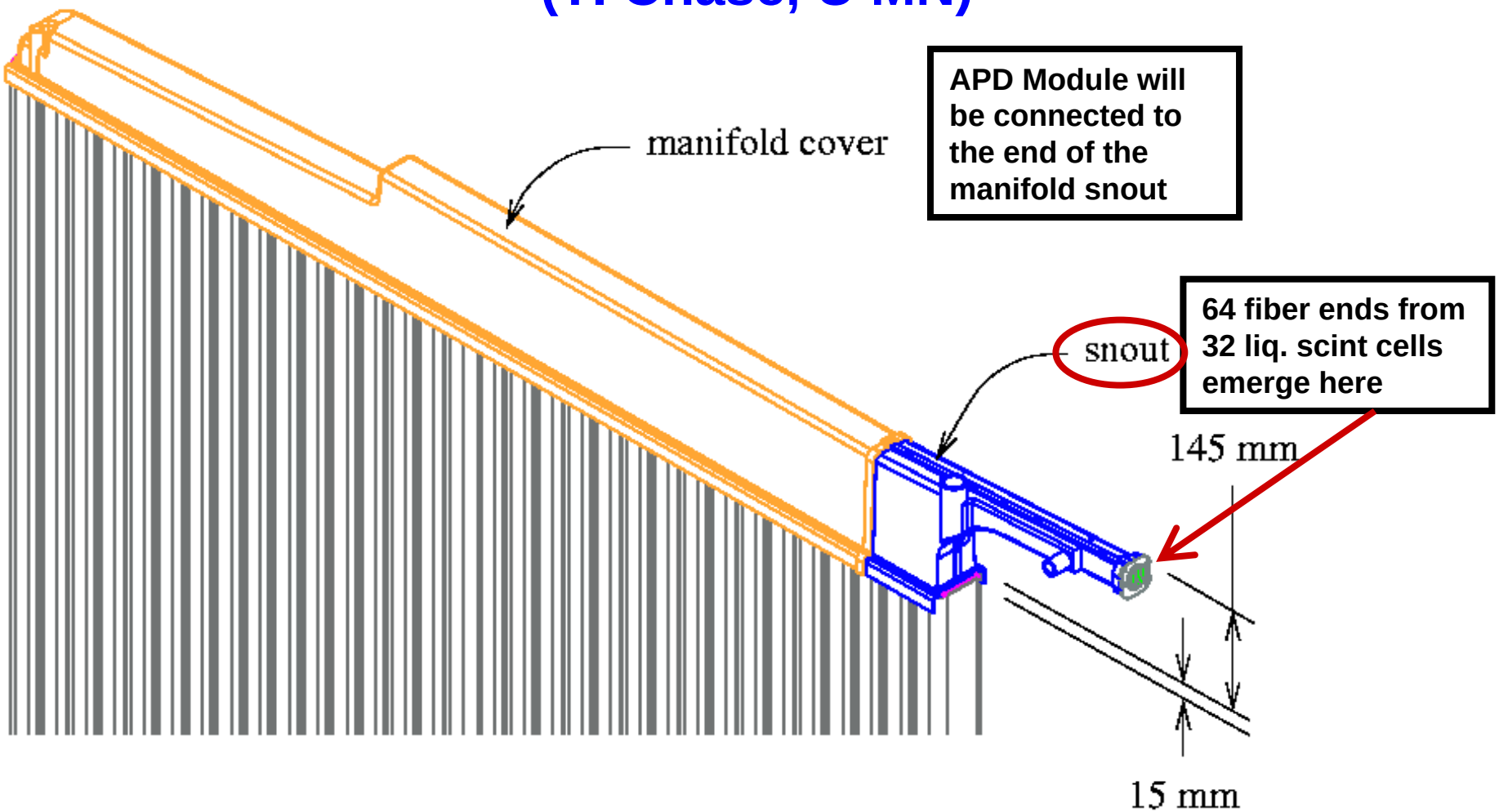

Snout/FE Electronics Cartoon

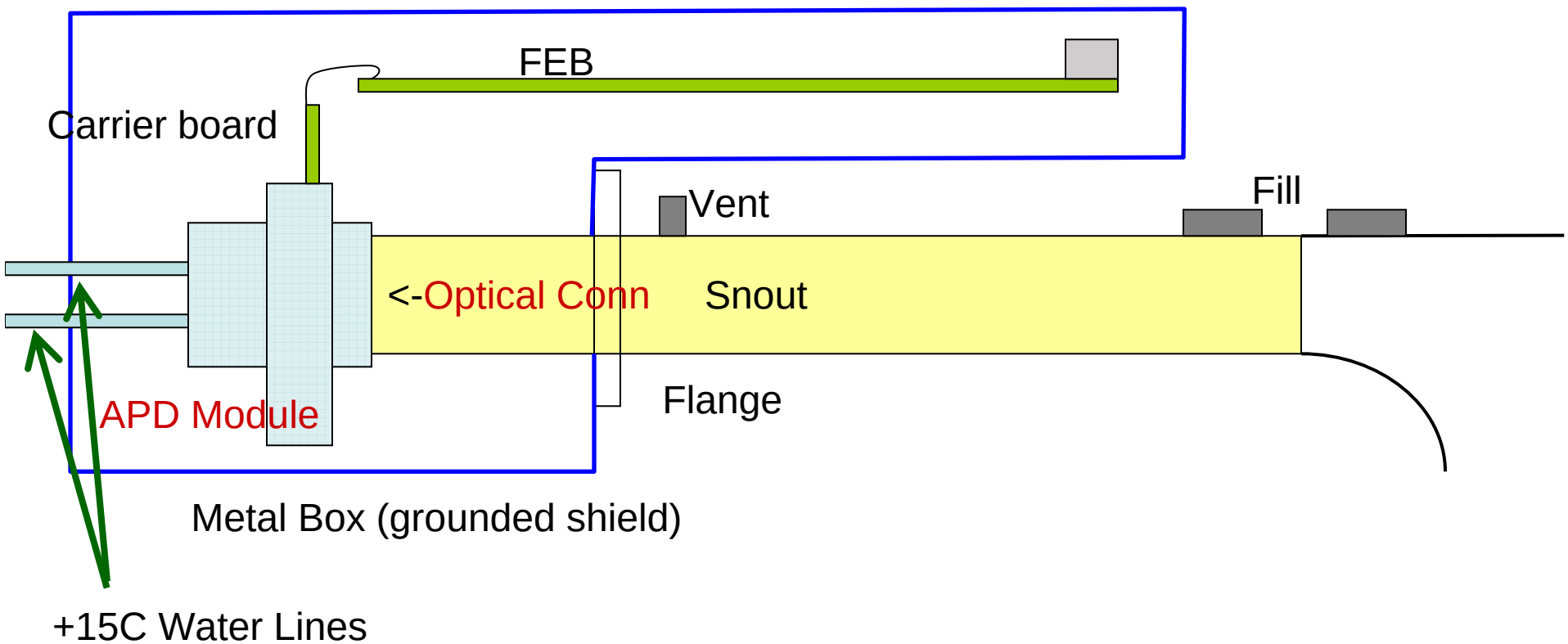

Requirements & Scope

- Requirements for Photodetector Interface / APD Module
  - **Optical Alignment:**

    Fibers must be aligned to APD pixels (transversely & longitudinally)
    i.e., module must serve as an alignment jig for fiber-end block
  - **Cooling:**

    APD's must be cooled to -15 C, done via Thermoelectric cooler (TEC)
  - **Other Environmental:**

    Must be impervious to leakage of light & formation of condensation
  - **Electronic Interface**

    APD signal, bias lines, temp sensor, TEC power connections to FEB.
  - **Mechanical**

    Unpackaged APD arrays w/ Ceramic backing: delicate! (780 μm thick)
- Comments:
  - **We must build 14,136 APD Modules for the full detector + spares + NearDet**
  - **Cost and ease of fabrication/installation/maintenance are key consider'ns**
  - **Many constraints are imposed by other subsystems !!**

Management Structure

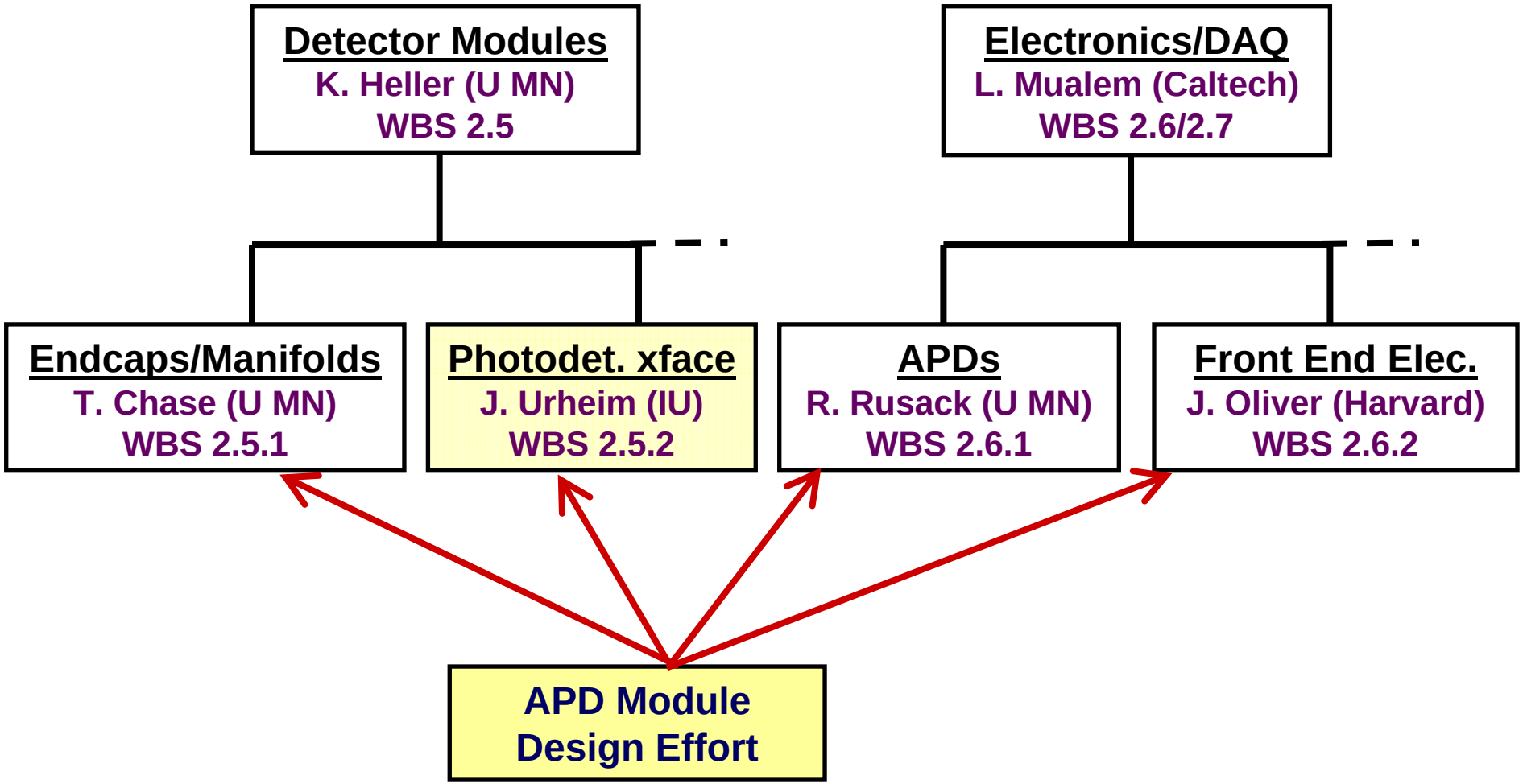

APD Module/Photodetector xface Design/Prototype Team

- Caltech
  - **L. Mualem (Scientist, Physics)**
- Harvard University
  - **J. Oliver (Elec. Eng., Physics)**
- Indiana University
  - **C. Bower (Scientist, Physics)**
  - **F. Busch (Tech, NOvA)**
  - **P. Childress (Physics Machine Shop)**
  - **J. Urheim (Faculty, Physics)**
  - **B. Adams (Tech, Astronomy)**
  - **S. Mufson (Faculty, Astronomy)**
  - **W. Fox (Mech. Eng., IU Cyclotron Facility)**
  - **G. Visser (Elec. Eng., IU Cyclotron Facility)**
- University of Minnesota
  - **K. Arms (Postdoc, Physics)**
  - **T. Chase (Faculty, Mechanical Eng.)**
  - **W. Gilbert (Tech, Physics)**
  - **J. de la Cova (Physics Machine Shop)**
  - **R. Rusack (Faculty, Physics)**

Basic Design Considerations

- **Flip-chip mounting of APD array on 0.068-in circuit board.**
  - *We call this the "carrier board". It has cutouts aligned w/ APD arrays.*
  - *APD surface is ~25-50 μm above the board -- height of bump bonds.*
- **Fiber end block must not apply mech. stress to the APD**
  - *Motivates an "air gap" between cookie and APD surface. Illumination studies indicate 50-100 μm is okay if transverse alignment can be maintained at same level*
- **We can rely on flatness of carrier board at 25-50 microns**
  - *Required by Hamamatsu for bump-bonding process*
- **APD is cooled directly by a Peltier Effect TEC.**
  - *The TEC must not apply significant mechanical stress to the APD array*
    For this reason we deploy a thermally conductive "crush pad" between TEC & APD
  - *The hot side of the TEC is in thermal contact with a water-cooled heat sink*
    +15 C water is the current baseline.
- **TEC mean time to failure: ~23 yrs, so failure rate = 3 / day ?**
  - *The TEC's will need to be swappable.*

APD Module Design Concept

- "Clam-shell" concept for APD Module Enclosure
  - **Injection-molded pieces surround (most of) carrier board,**
    - **creates isolated gas volume to keep APD dry and dark,**
    - **and can be designed to limit heat conduction paths.**
    - **The clamshell design simplifies alignment and facilitates mounting during installation.**
  - **Our optical connector is actually an entire 1/2 clam-shell.**
    - **It will be permanently fastened to the scintillator module manifold snout**
  - **The other half of the clamshell consists of a "heat sink holder" plus the water-cooled heat sink /epoxy /TEC /crushpad stack assembly that abuts the ceramic backing of the APD array.**

APD Module Design Concept

Design used for prototypes for thermal tests

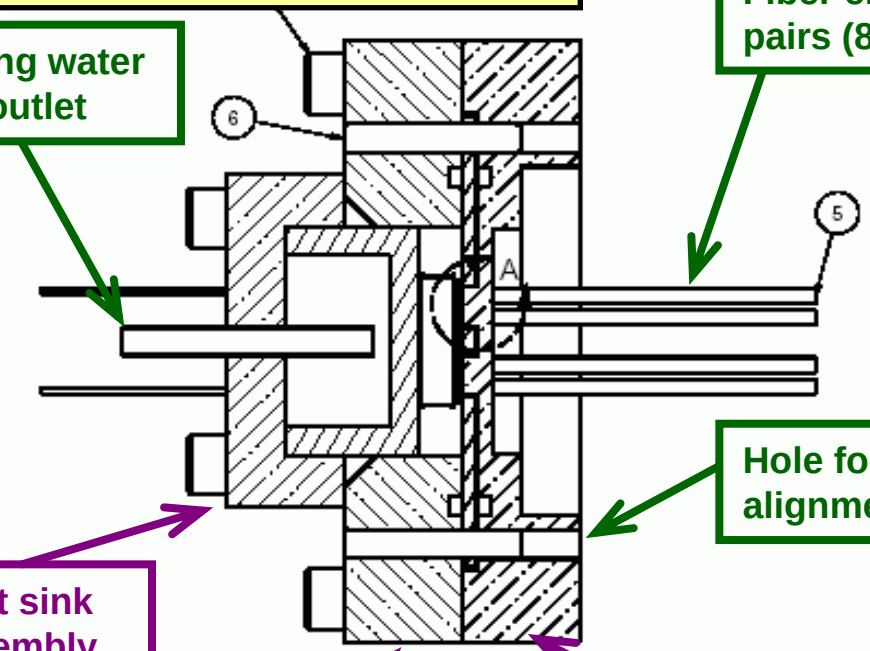

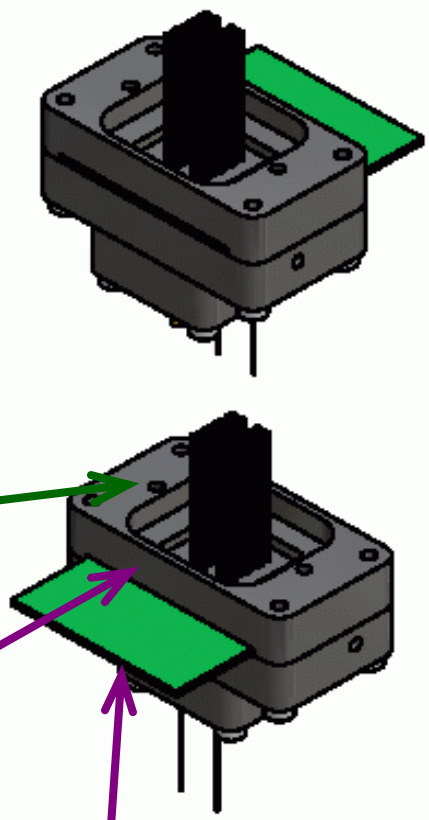

Cooling water inlet/outlet

Fiber end pairs (8 x 4)

Hole for alignment pin

Heat sink assembly

Spacer Frame/ Heat sink holder

Optical Connector

Carrier Board

APD Module Design Concept

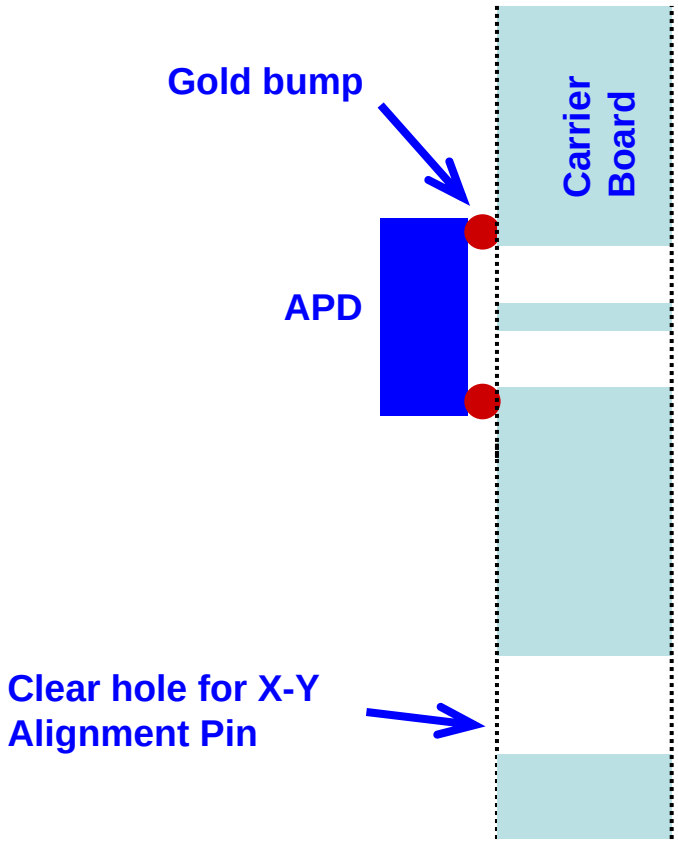

- "Clam-shell" design
  - **APD mounted on Carrier Board by Hamamatsu**
    - **'flip chip' bump bond process: active side of APD array is face down**
    - **slots in board will allow fiber ends in optical connector to access APD pixels**

Note: diagrams are NOT to scale !!!

APD Module Design Concept

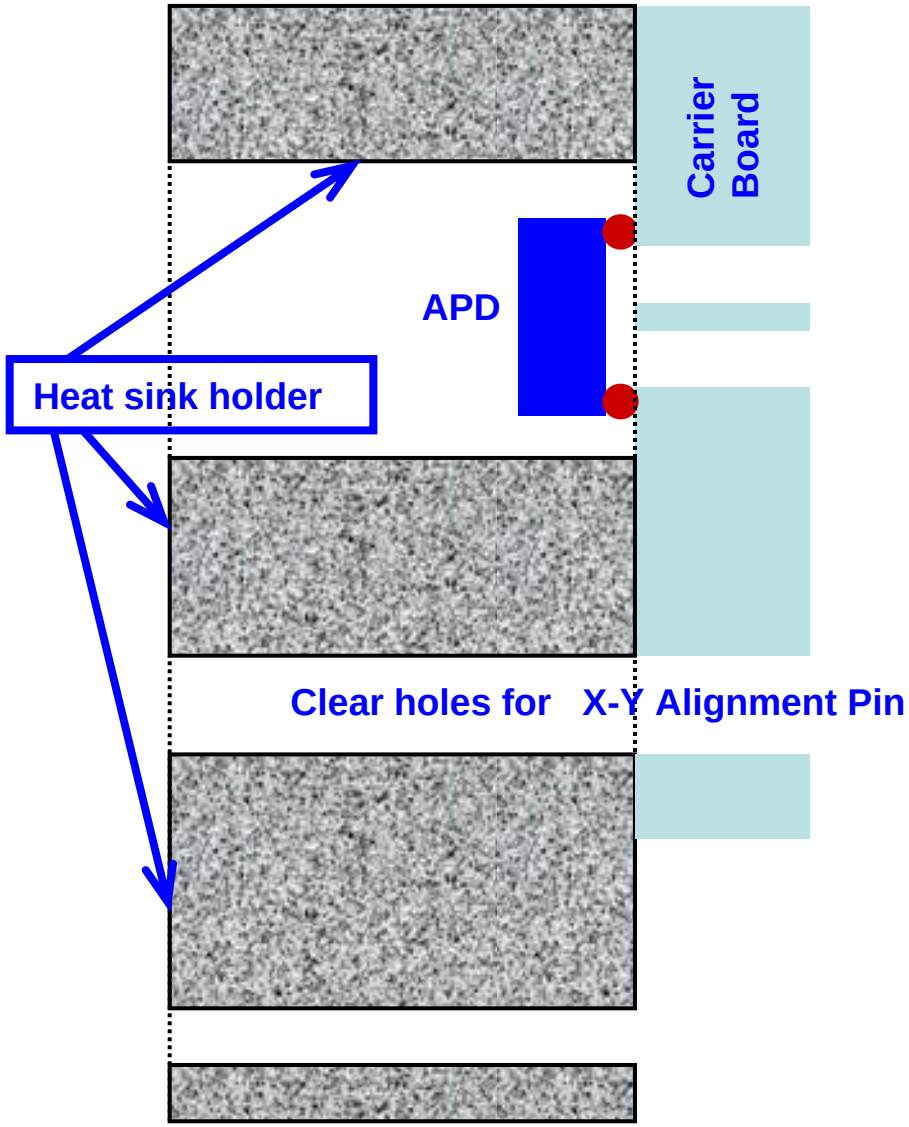

- "Clam-shell" design
  - **APD mounted on Carrier Board by Hamamatsu**
    - **'flip chip' bump bond process: active side of APD array is face down**
    - **slots in board will allow fiber ends in optical connector to access APD pixels**
  - **Heat sink holder**
    - **glued to carrier board**

APD Module Design Concept

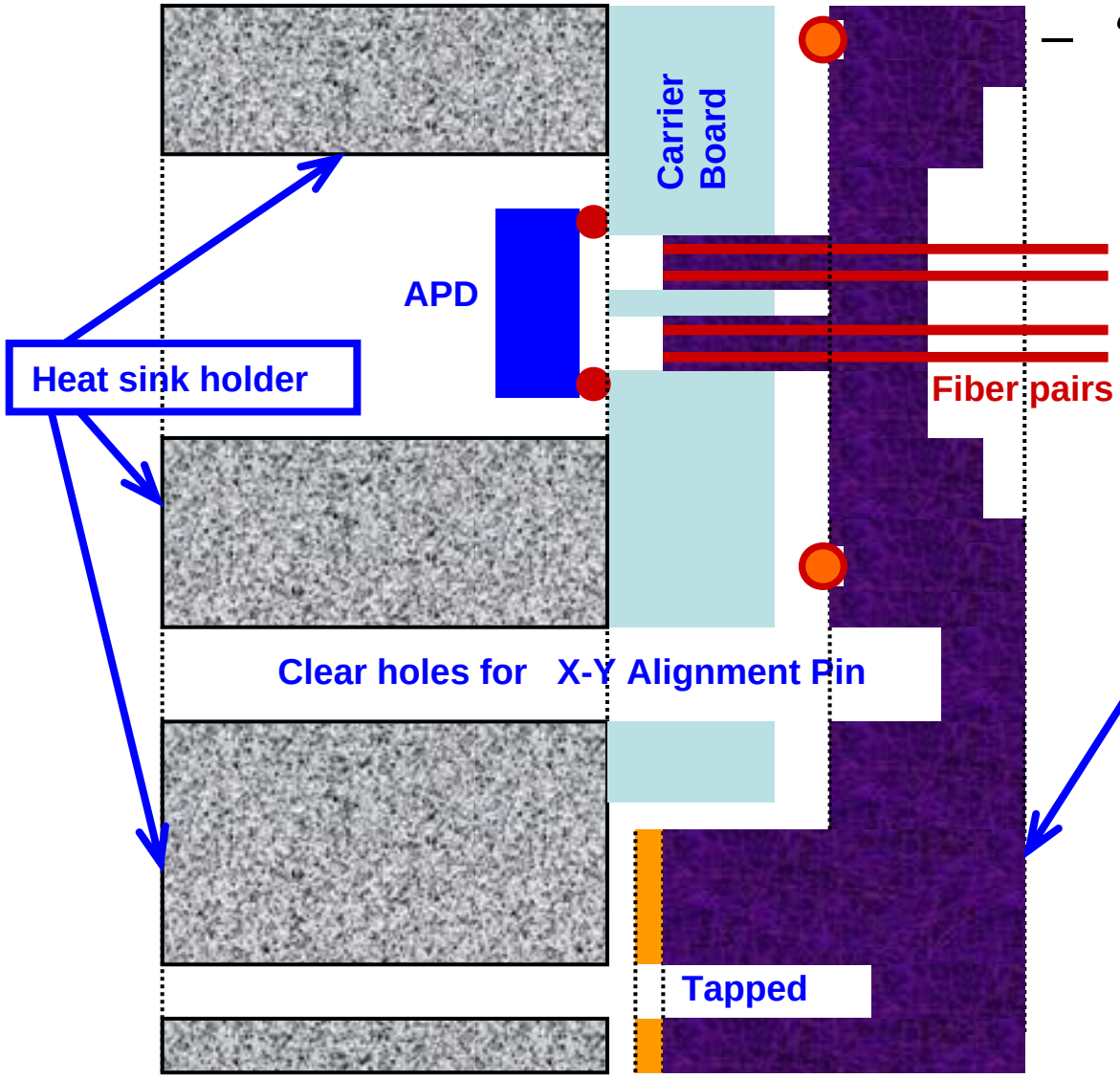

– "Clam-shell" design

- **APD mounted on Carrier Board by Hamamatsu**
  - **'flip chip' bump bond process: active side of APD array is face down**
  - **slots in board will allow fiber ends in optical connector to access APD pixels**
- **Heat sink holder**
  - **glued to carrier board**
- **Optical Connector**
  - **fiber end alignment in transverse (X-Y) direction achieved with dowel pins**

APD Module Design Concept

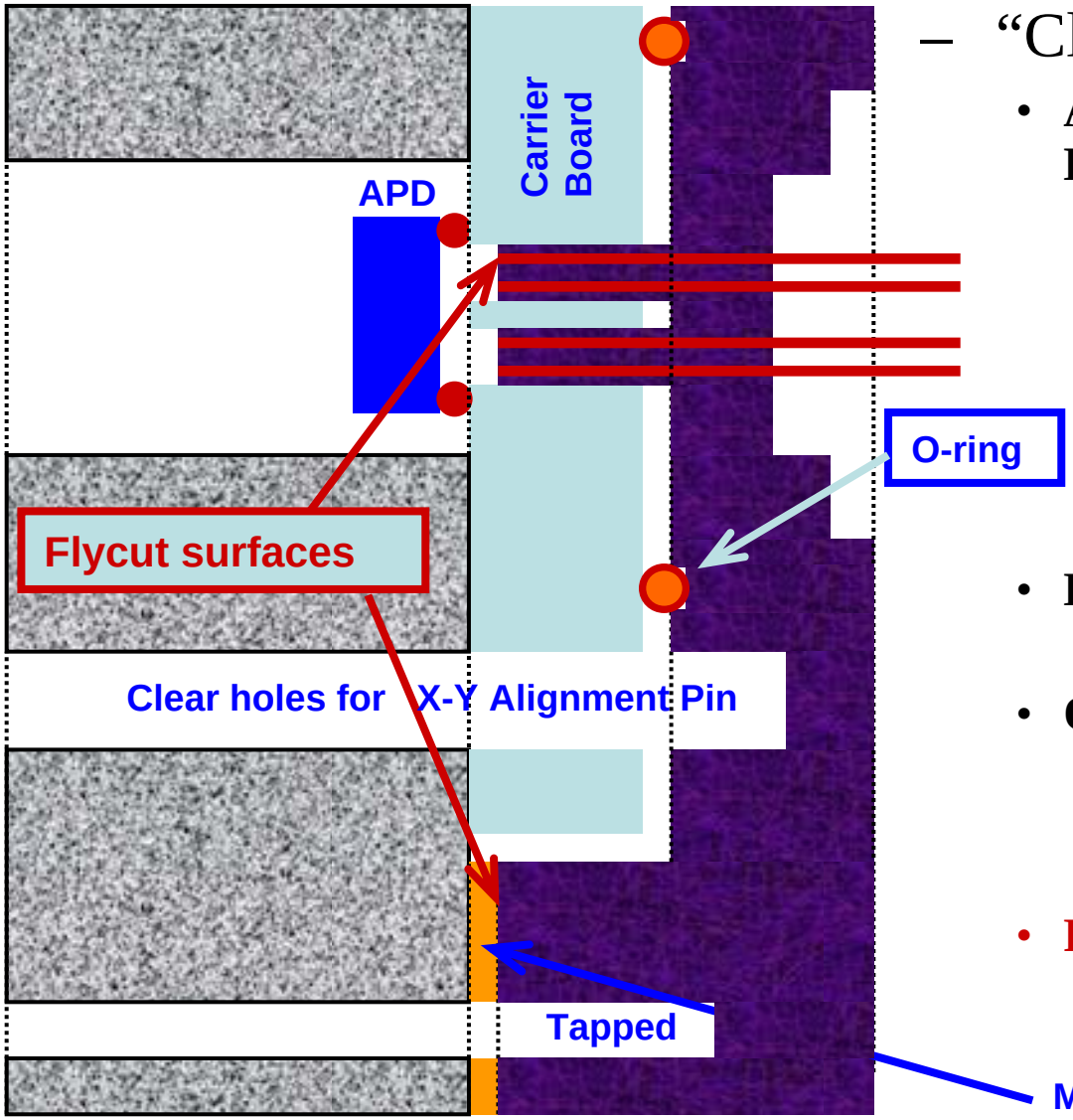

– "Clam-shell" design
- **APD mounted on Carrier Board by Hamamatsu**
  - **'flip chip' bump bond process: active side of APD array is face down**
  - **slots in board will allow fiber ends in optical connector to access APD pixels**
- **Heat sink holder**
  - **glued to carrier board**
- **Optical Connector**
  - **fiber end alignment in transverse (X-Y) direction achieved with dowel pins**
- **Flycut Surfaces on Opt. Conn.**
  - **allow alignment in Z**

APD Module Design Concept

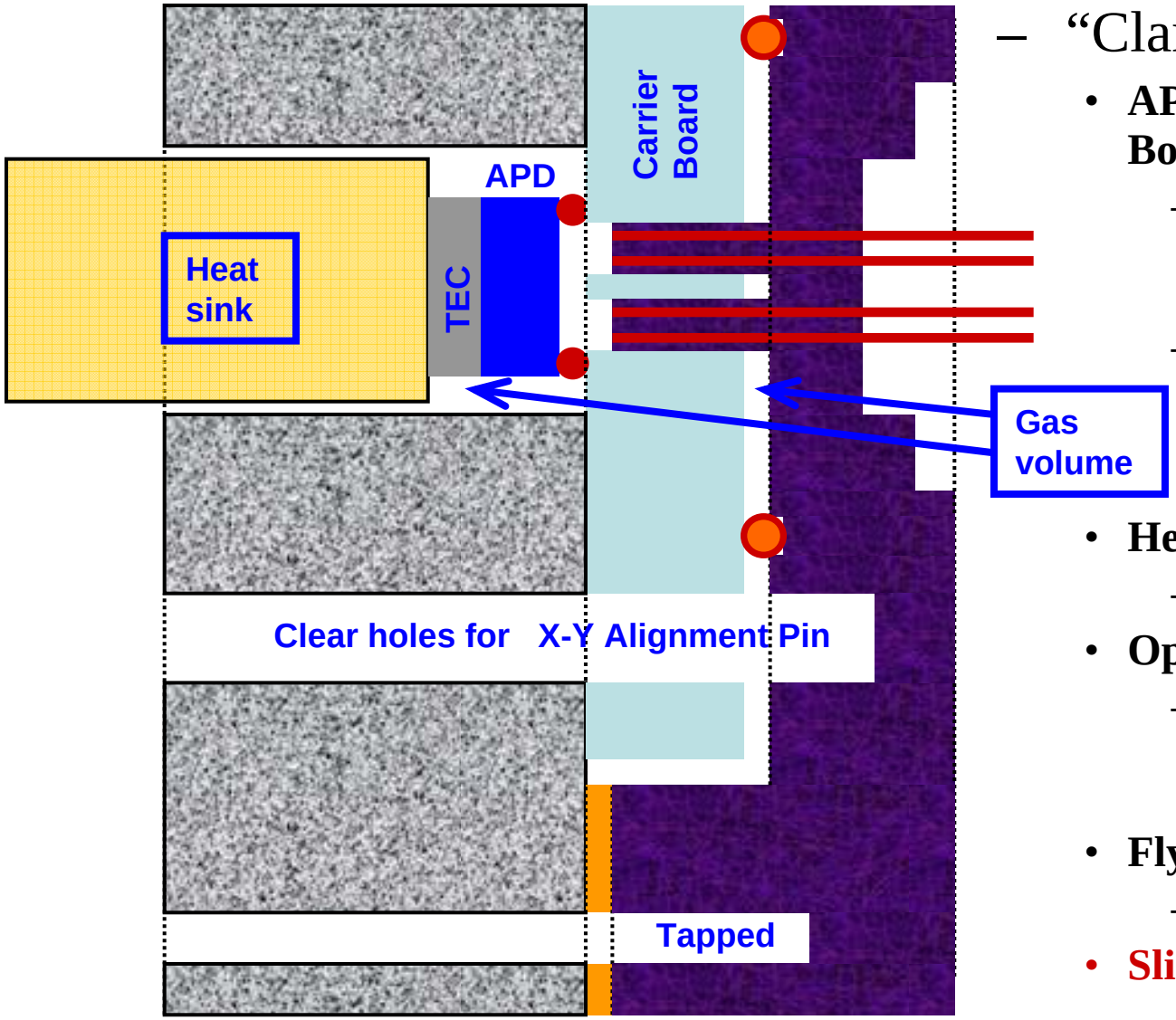

– "Clam-shell" design
- **APD mounted on Carrier Board by Hamamatsu**
  - **'flip chip' bump bond process: active side of APD array is face down**
  - **slots in board will allow fiber ends in optical connector to access APD pixels**
- **Heat sink holder**
  - **glued to carrier board**
- **Optical Connector**
  - **fiber end alignment in transverse (X-Y) direction achieved with dowel pins**
- **Flycut Surfaces on Opt. Conn.**
  - **allow alignment in Z**
- **Slide in heatsink/TEC ass'y**
  - **APD now fully isolated**

Complete System Design

Optical conn. + APD Module + Electronics Box (layout by Walt Fox, IU)

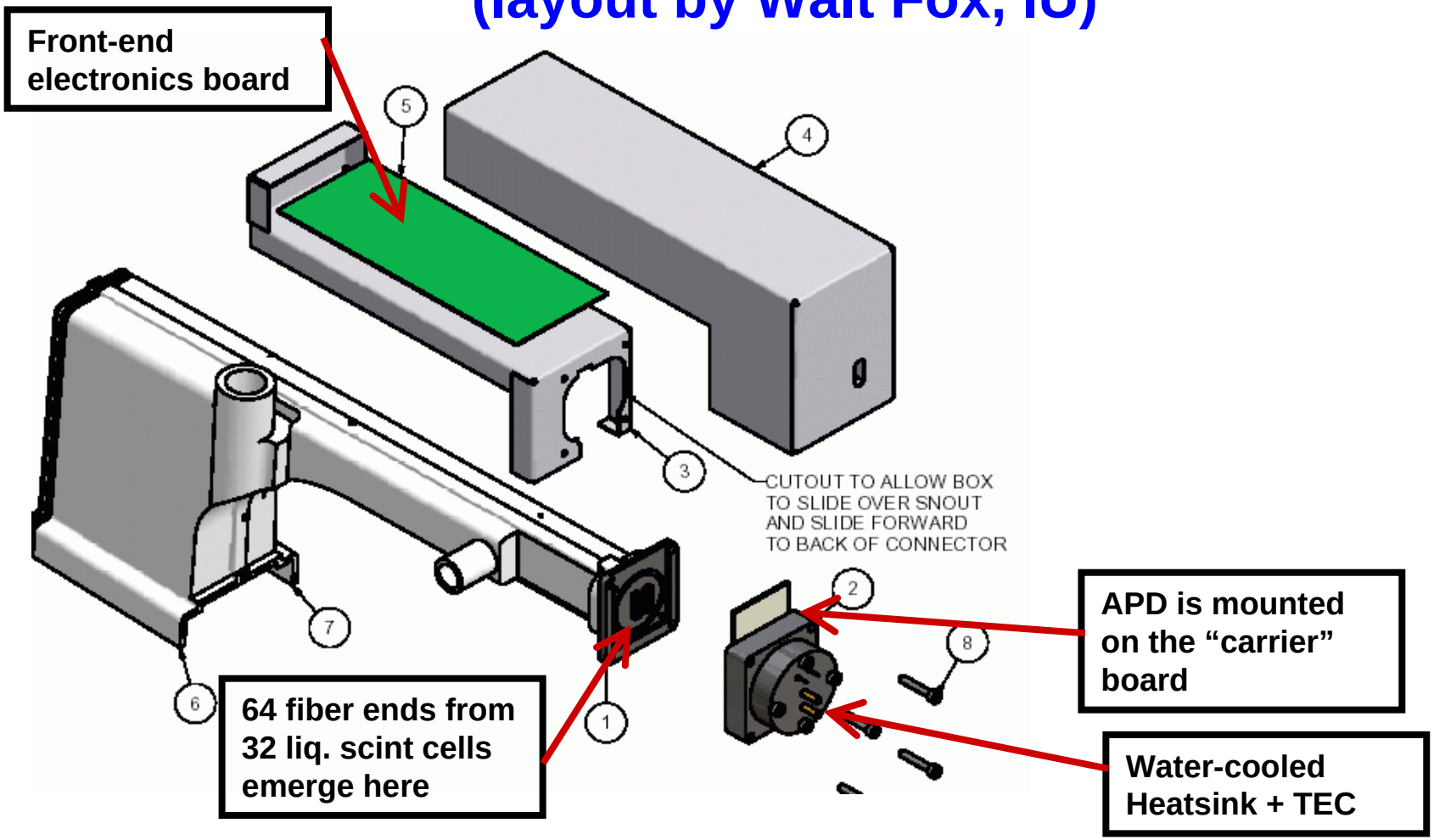

Cramped Environment !

Severe interference in upper corners between readout for adjacent vertical/horizontal planes !

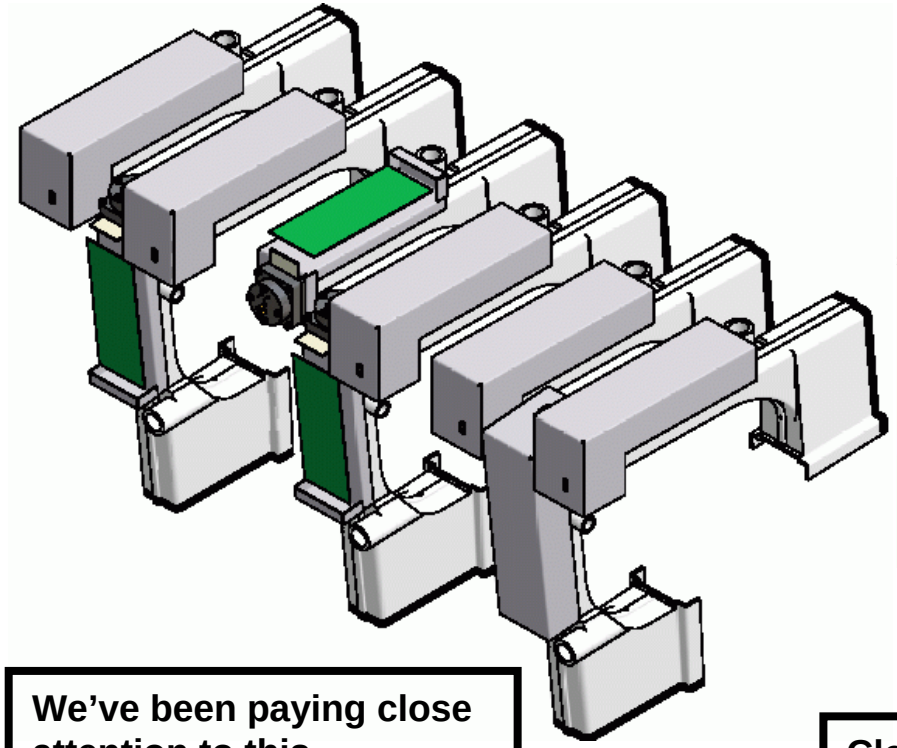

We've been paying close attention to this.

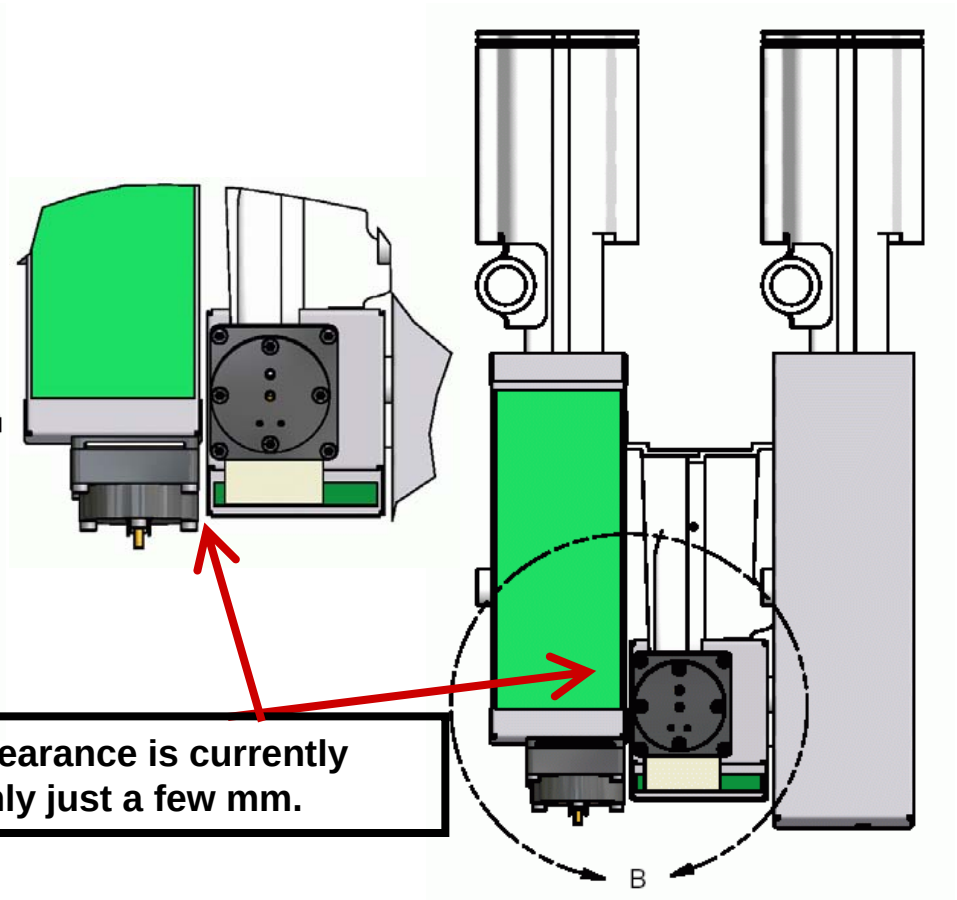

Clearance is currently only just a few mm.

IPND Optical Connector Design

Have recently converged on optical connector design (similar to version shown by T. Chase in 2.6.1 talk)

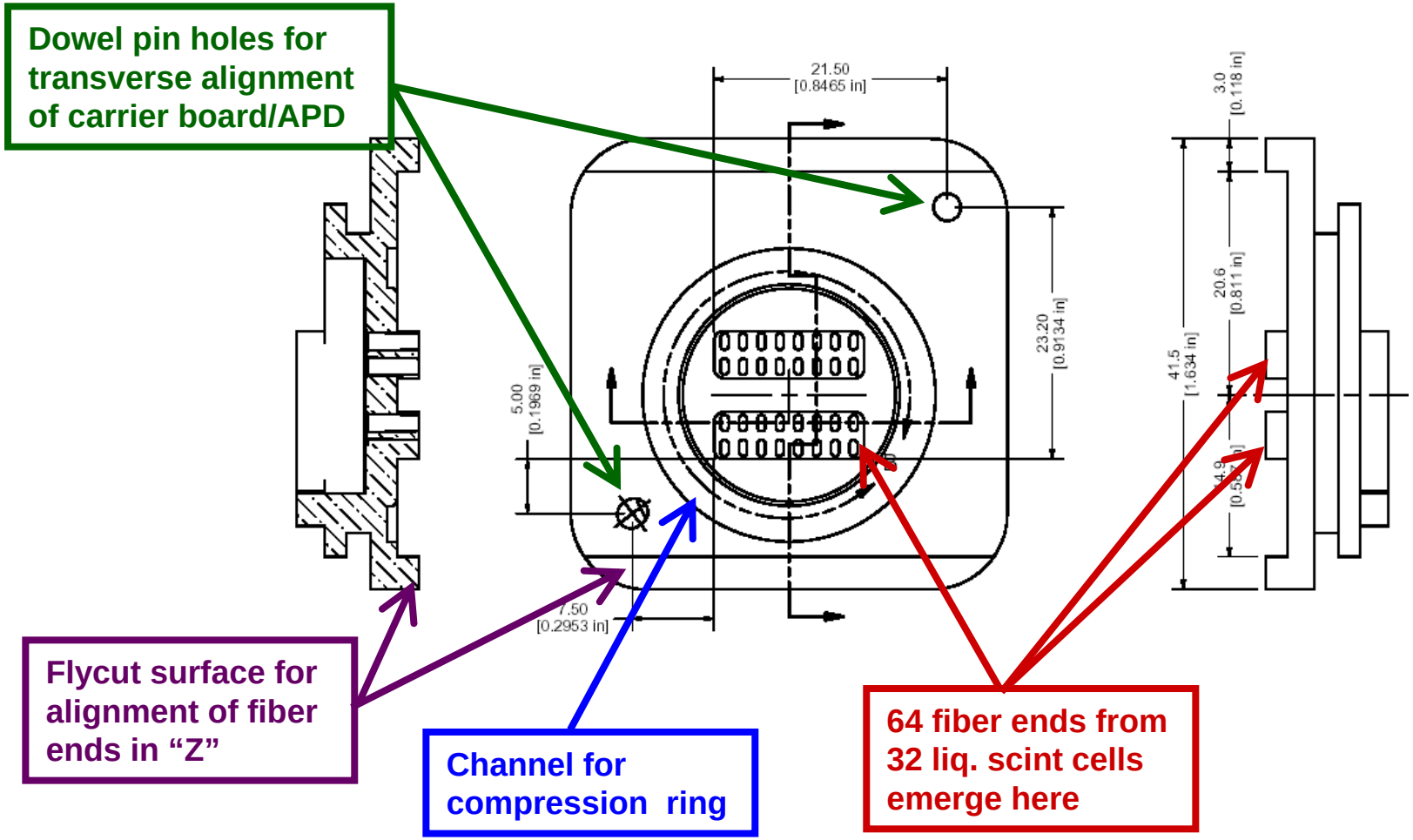

APD Module Design for IPND

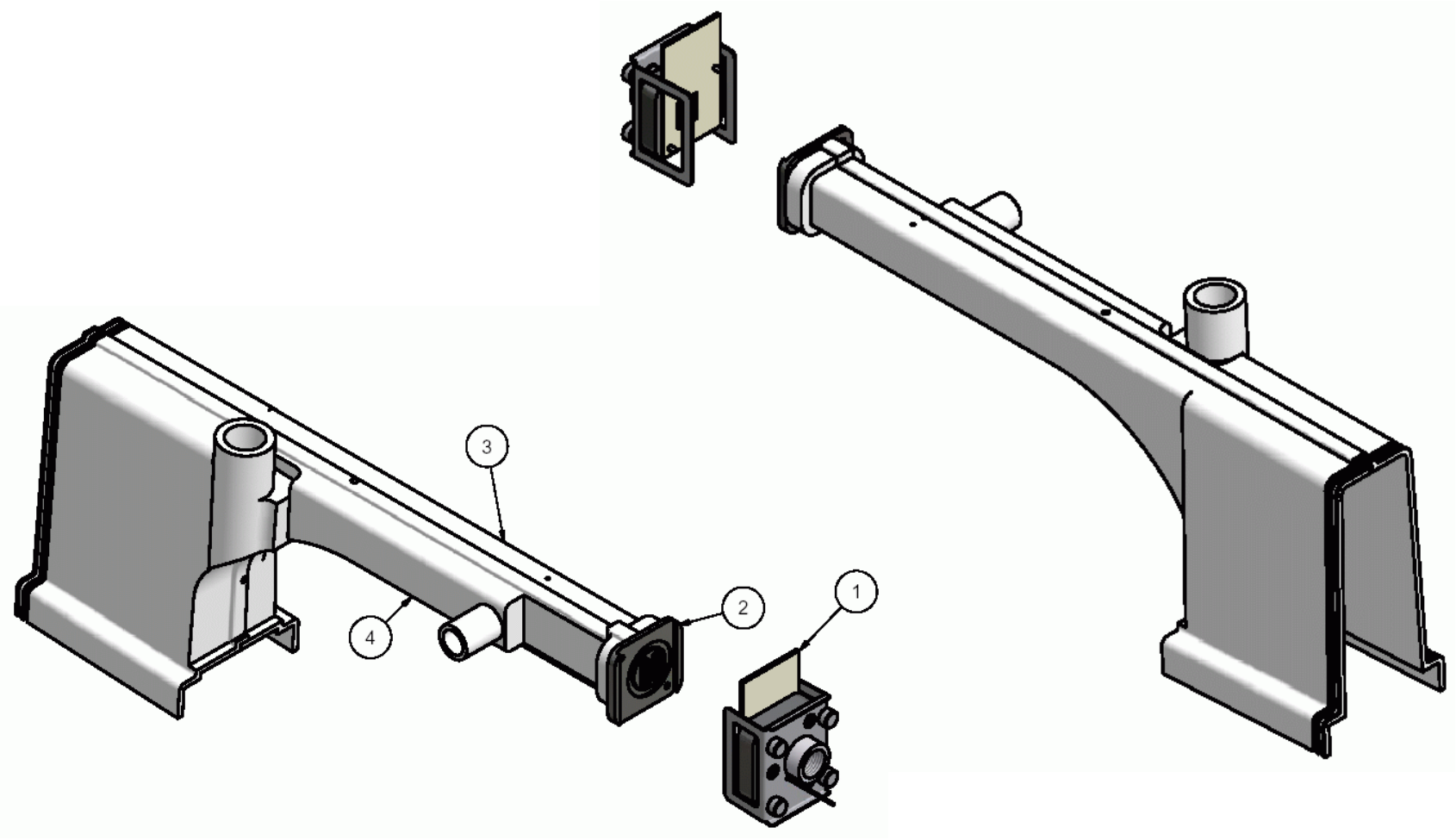

APD Module Design for IPND

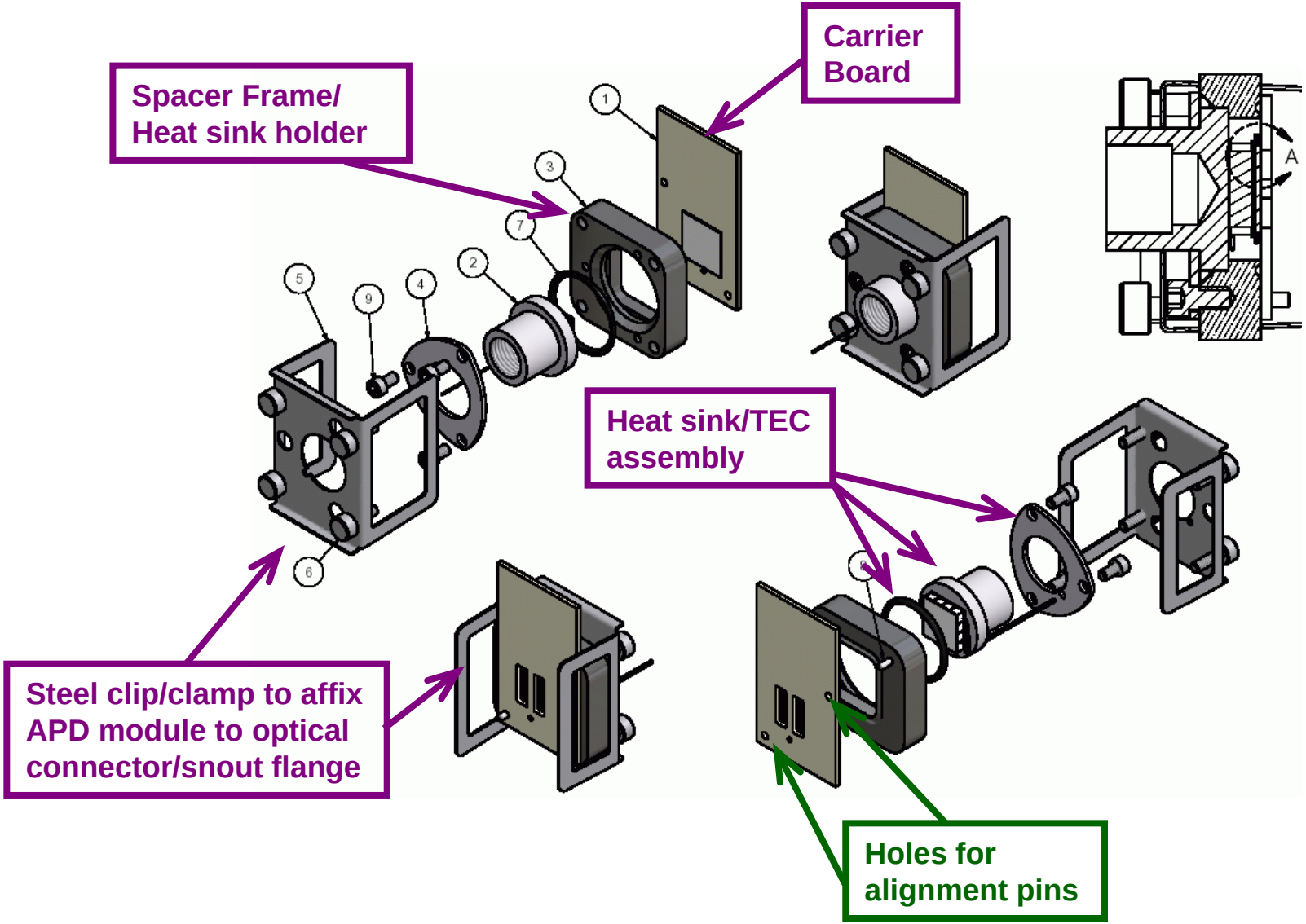

Summary

- Status of Photodetector Interface/APD Module
  - **Design Work:**

    Have been through many iterations!

    Mechanical, optical, environmental, & thermal requirem'ts are met

  - **Prototypes fabricated for Thermal Studies:**

    Have demonstrated ability to cool APD array to -15C

    Measured heat load of ~2 Watts, requiring ~3 Watts of power to TEC

    Have shown that +15C water at 2 ml/s can remove heat

  - **Have converged on an optical connector design for IPND:**
    - ***335 (+ spares) needed for IPND in Fall 2007.***
    - ***Corresponding APD modules needed by Winter/Spring 2008.***
    - ***Design for both is manufacturable. More details on APD module in electronics breakout session.***
    - ***Hopefully only minor design modifications needed for full detector !!***

Backup Slides

Gold Bump Bond (Hamamatsu)

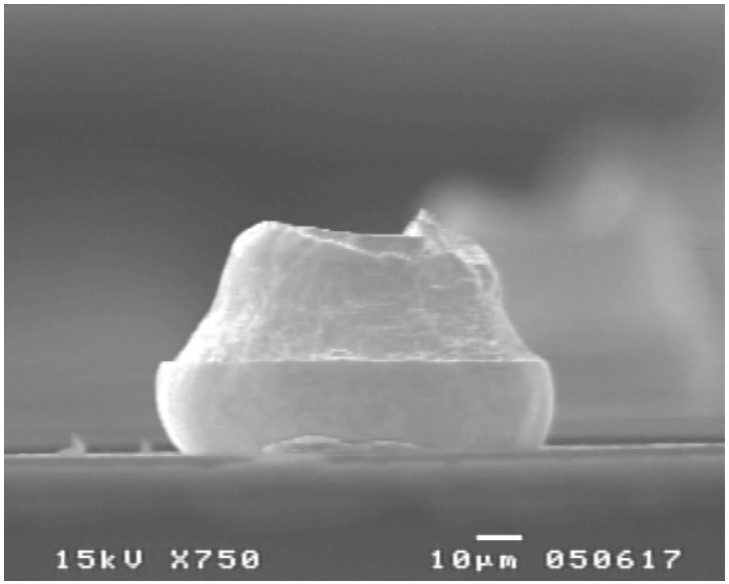

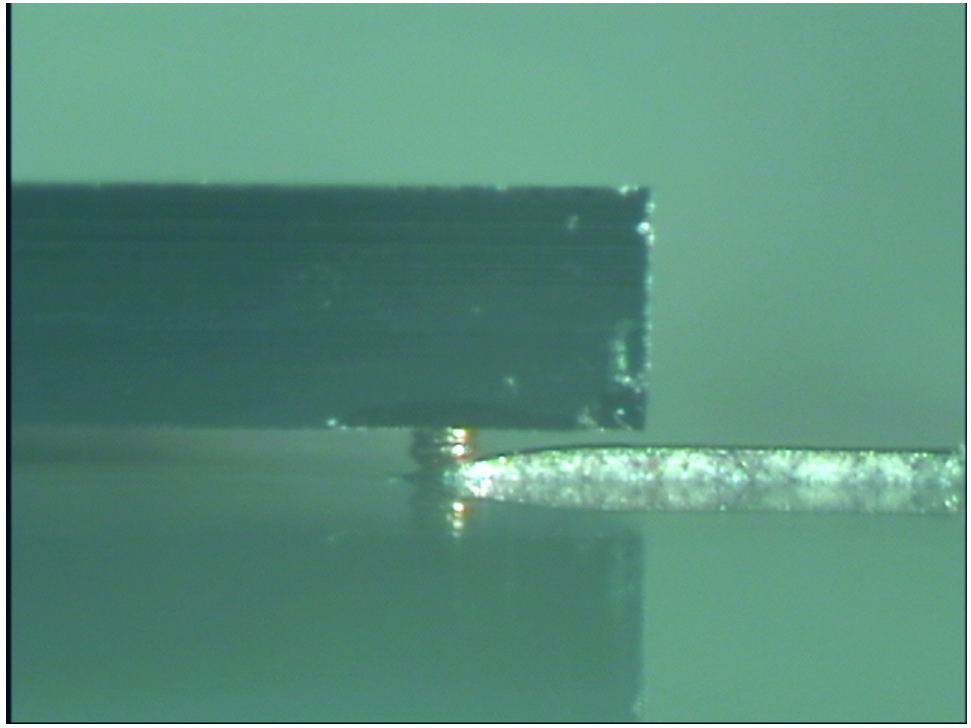

Diameter : ~100µm

Height : ~50µm

Fiber Alignment - Transverse

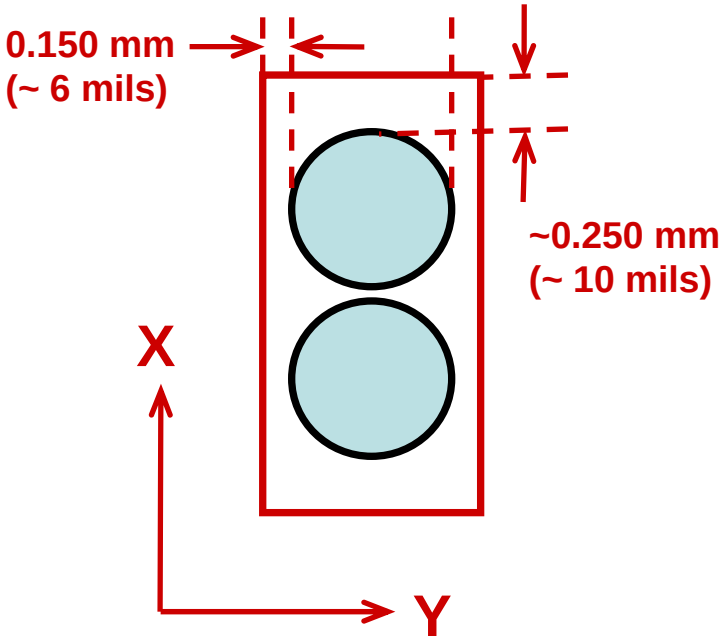

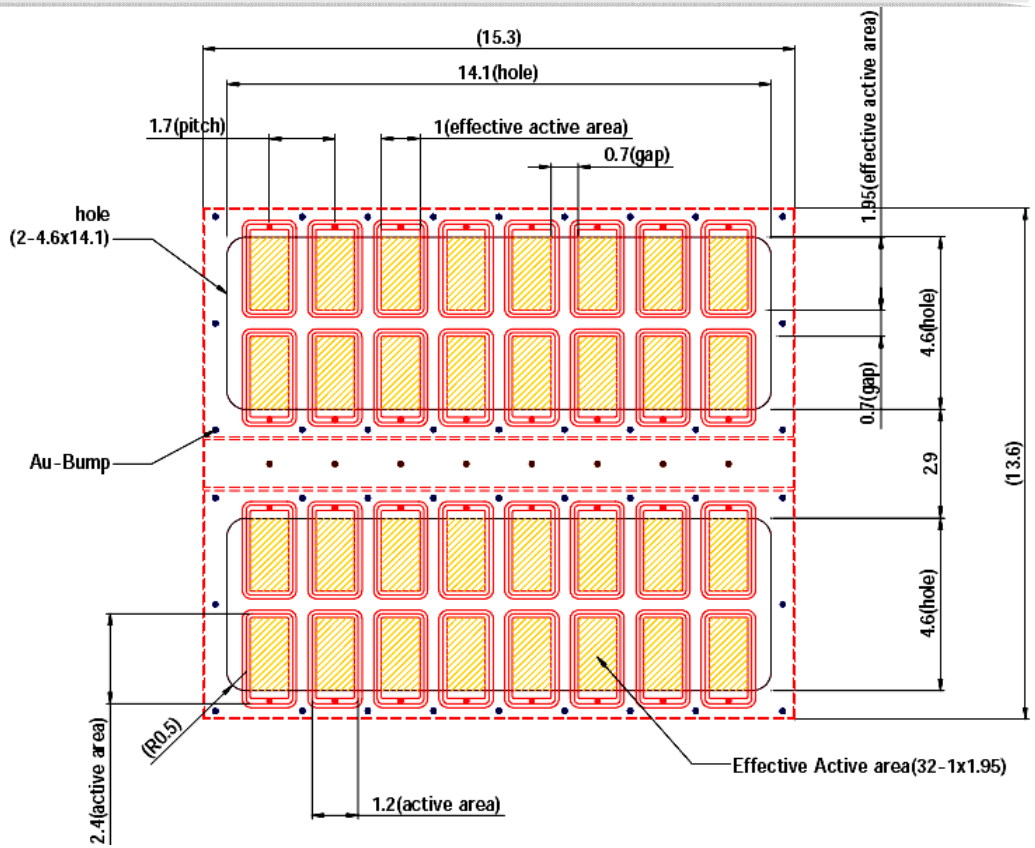

– Effective pixel size is 1.0 mm (y) x 1.95 mm (x)

- **Y is the critical dimension.**

Suggestion from illumination study that ~2 mil misalignment is tolerable for case of z offset of 3-4 mils.

Fiber Alignment Study

<u>Issue</u>: What are the x/y alignment tolerances required for an APD pixel as a function of fiber height (z) above the chip?

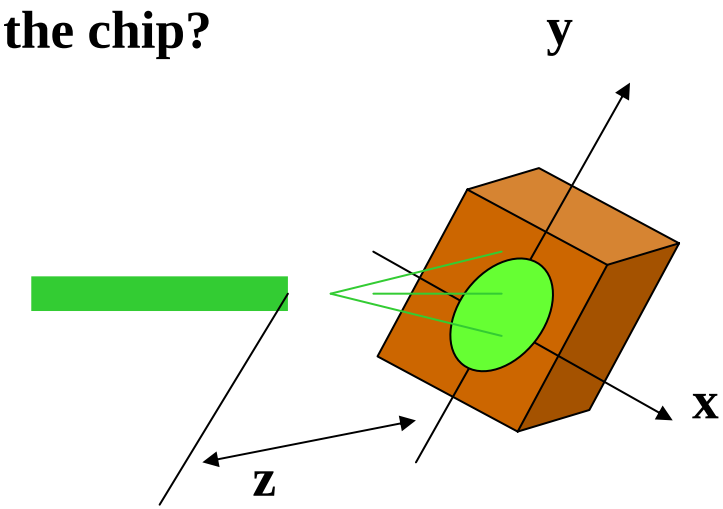

<u>Apparatus</u>

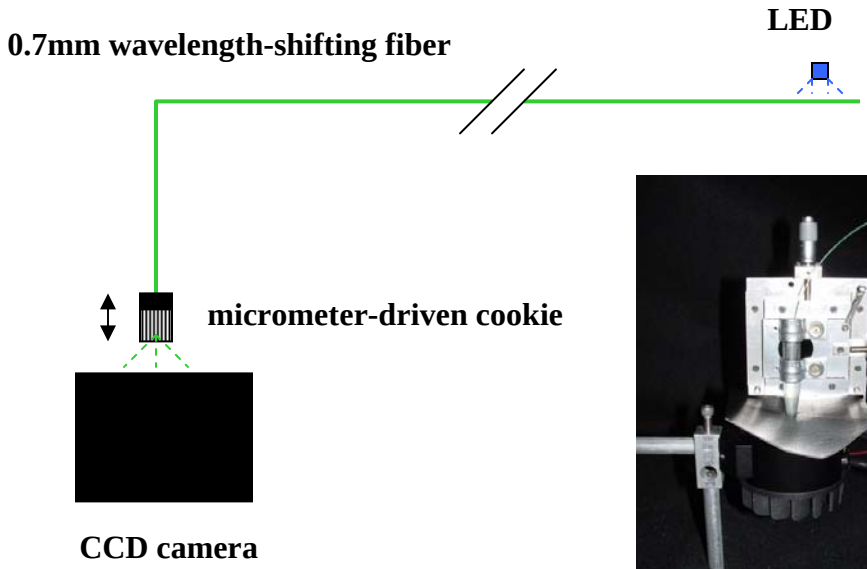

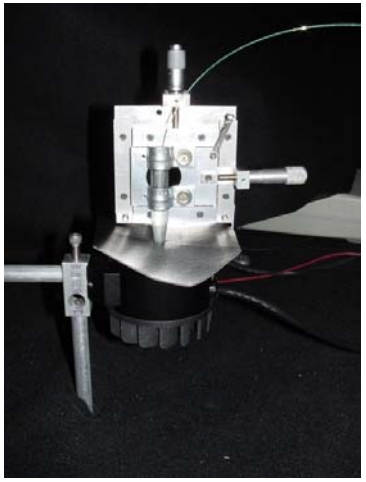

Fiber Alignment Study

8 fibers arranged as on an optical connector, illuminated by an LED and viewed by a commercial CCD. Shown are images w/ fibers pressed against the CCD.

0.7mm fiber images

APD pixel outline

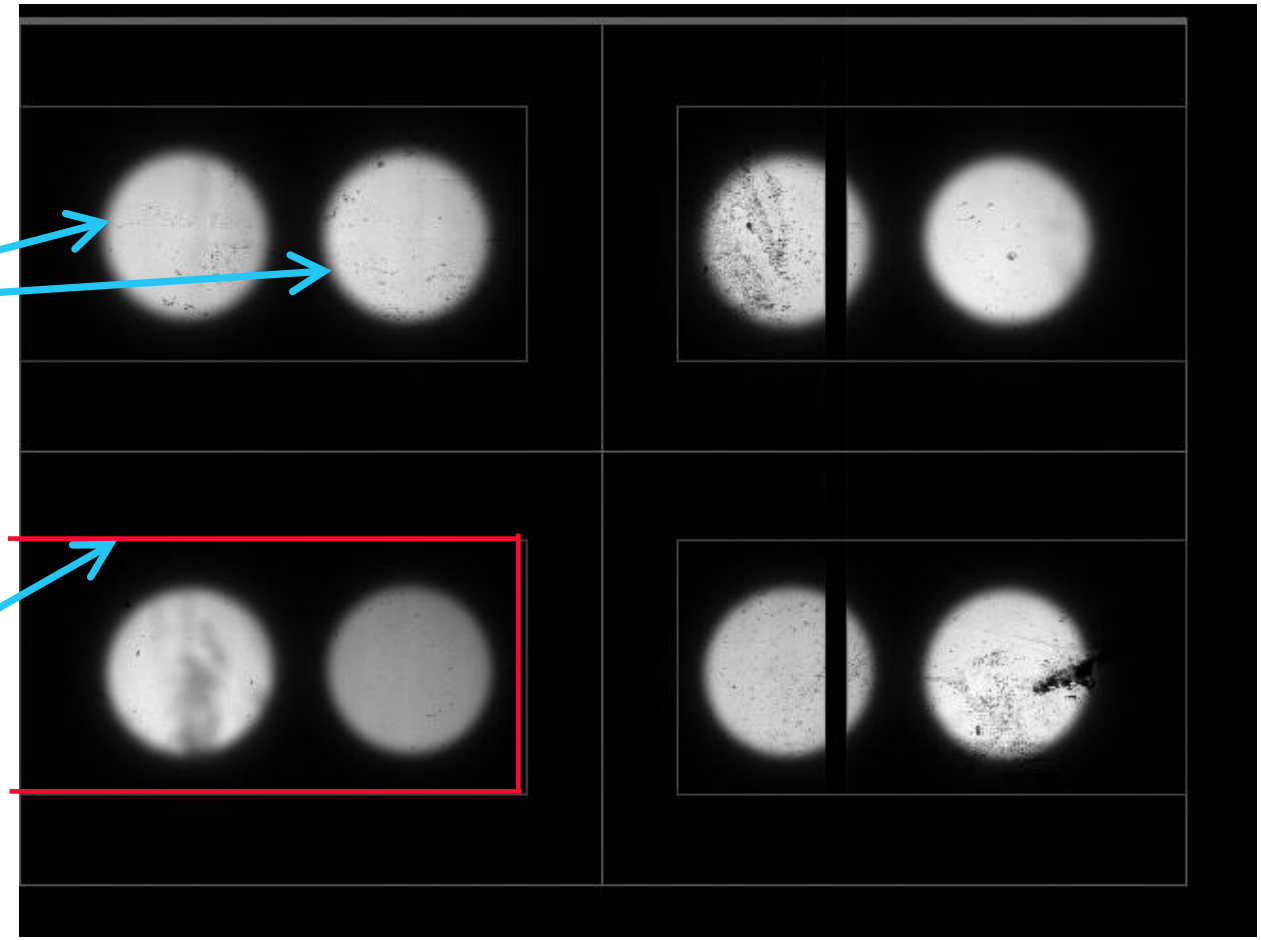

Fiber Alignment Study
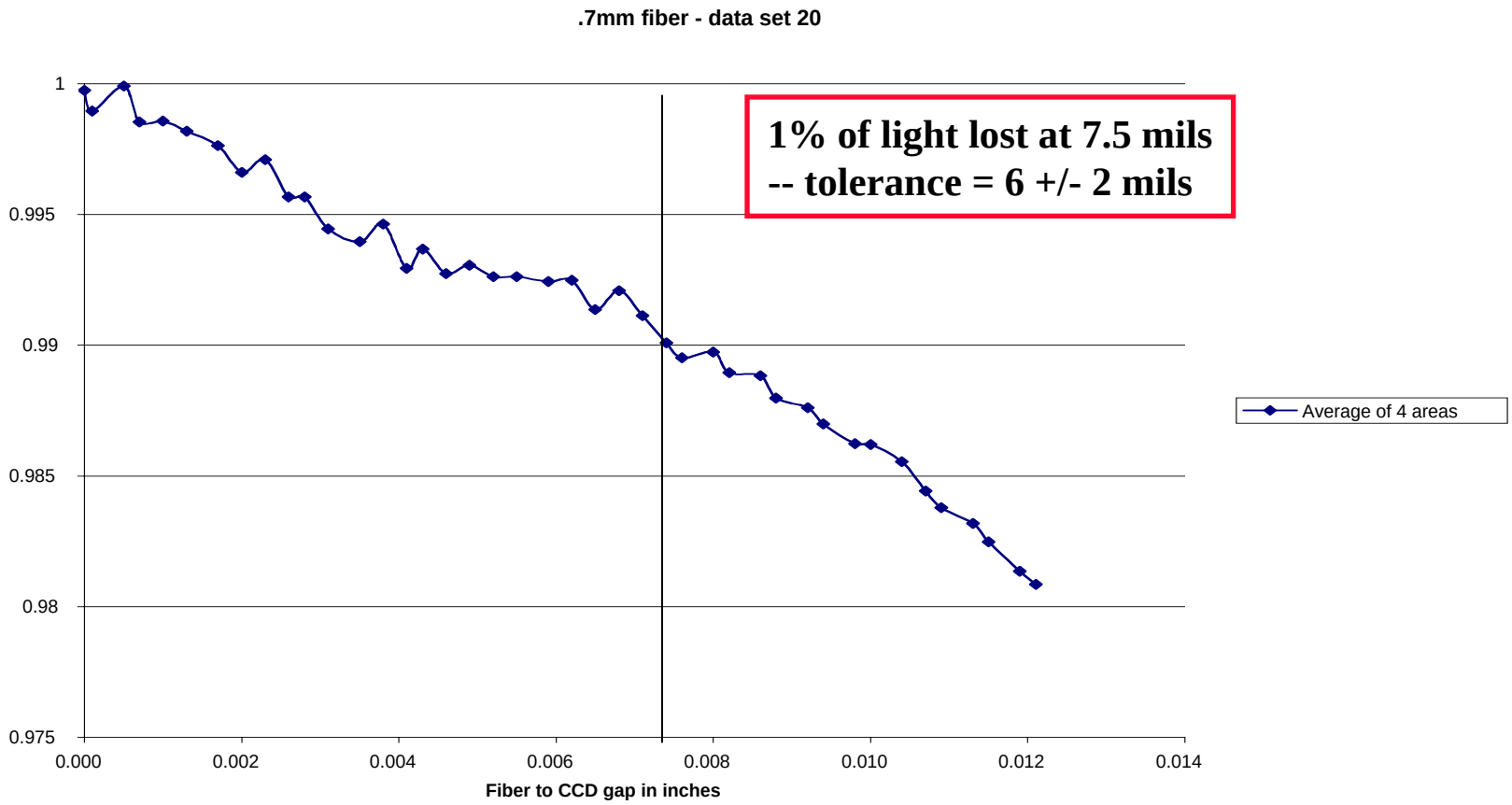
Shown is fraction of light measured by portion of CCD within area corresponding to an APD pixel -- versus -- the fiber-to-CCD gap (measurements: B. Adams and S. Mufson)