NuMI Upgrades
WBS 1.0.3 and 2.0.3

Mike Martens
Fermilab Accelerator Division

CD-2/3a Director's Review of NOνA
June 4-6, 2007

Talk Outline

- Introduction
- Performance Specifications
- Scope of System & WBS Interfaces
- Design Issues, Progress & Plans
- Value Engineering & Risk Management
- Costs
- Schedule & Milestones
- Summary

NuMI Beamline

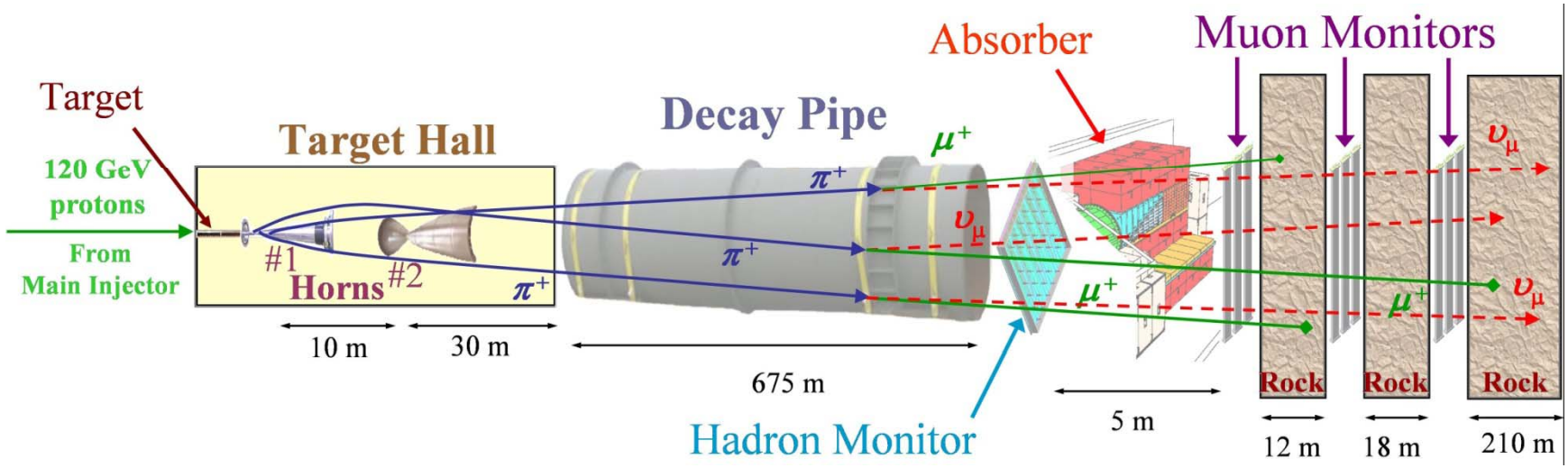

- 120 GeV Protons delivered from the Main Injector.
- Target & Horn position (optics) configurable to change the neutrino energy spectrum.
- Designed for 400 kW proton beam power on target.

Achieved to date in the low energy configuration for MINOS: ~3×10^{20} POT, 320 kW beam power, and 4.0×10^{13} Protons/pulse

Neutrino Energy Spectrum

Medium Energy ν Beam is better for NOνA (14 mrad off-axis)

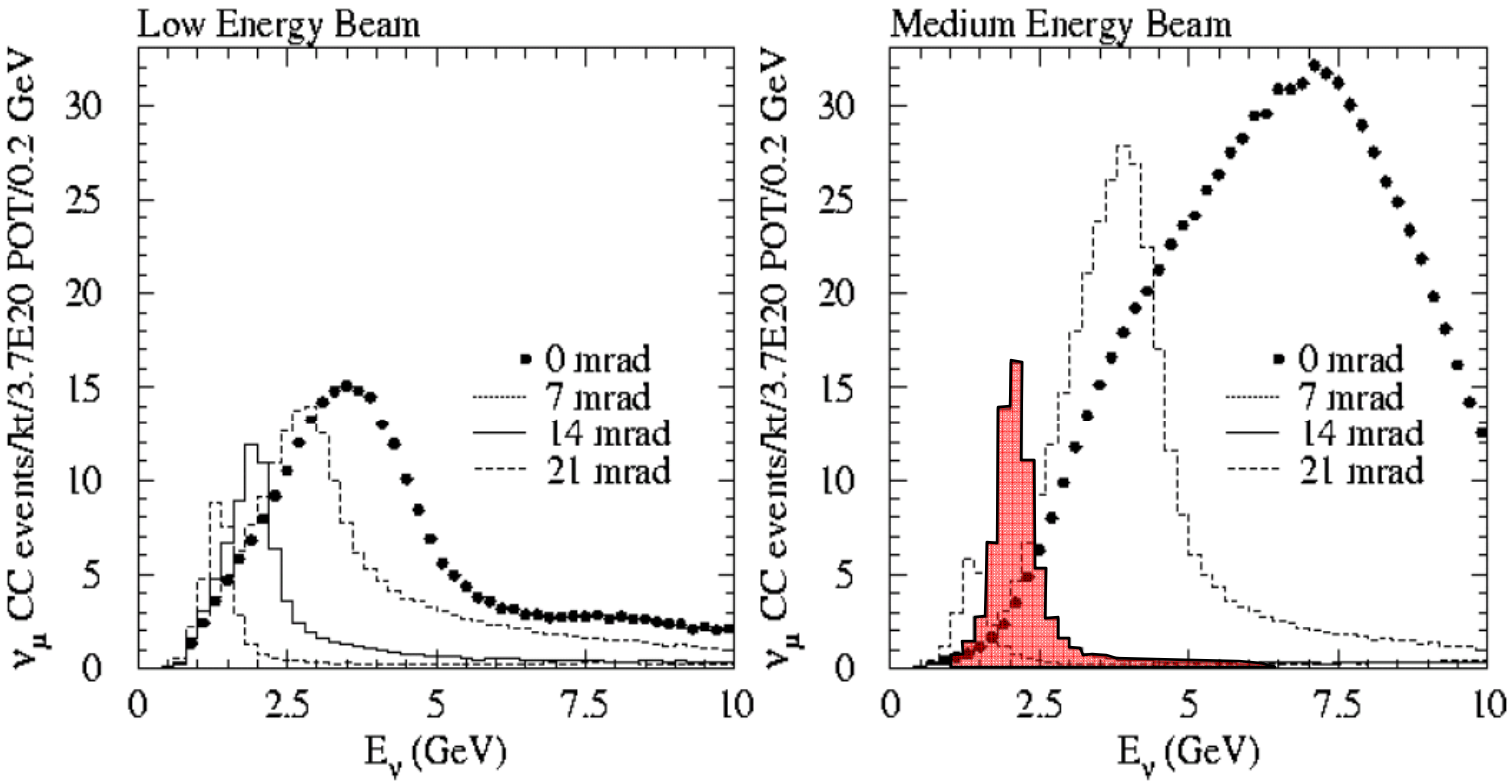

Fig. 2.7: CC ν_μ event rates expected under a no-oscillation hypothesis at a distance of 800 km from Fermilab and at various transverse locations for the NuMI low-energy beam configuration (left) and medium-energy beam configuration (right).

Target Hall

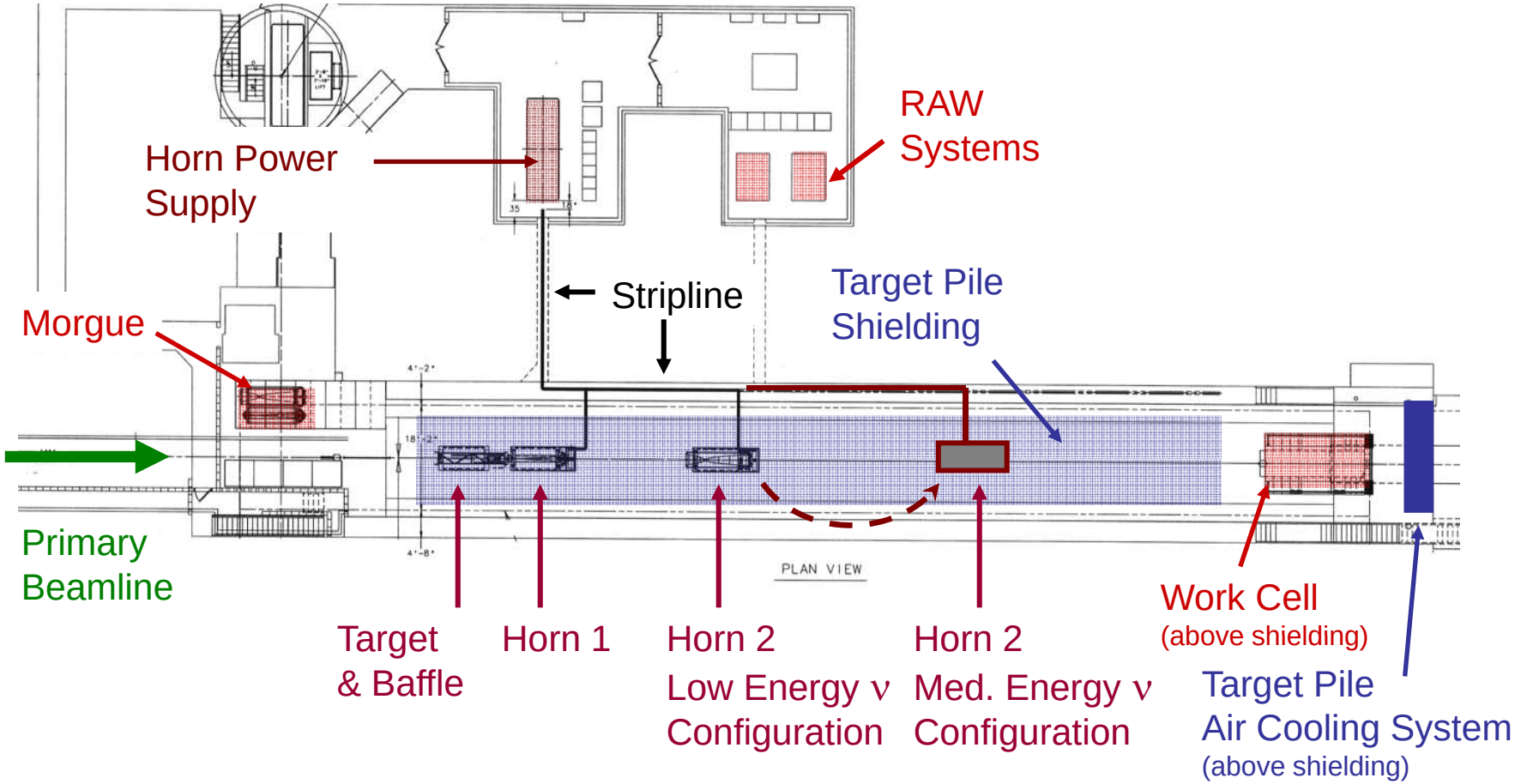
Horn Power Supply
RAW Systems
Stripline
Target Pile Shielding
Morgue
Primary Beamline
PLAN VIEW
Target & Baffle
Horn 1
Horn 2 Low Energy ν Configuration
Horn 2 Med. Energy ν Configuration
Work Cell (above shielding)
Target Pile Air Cooling System (above shielding)

Performance Specifications

- Neutrino Experimental Needs
  - Low Energy Configuration for MINERνA for about 1 year
    - Dictates the use of the Low Energy Target
  - Medium Energy Configuration for NOνA at 700 kW.
  - Beam, Target, and Horn Alignment Tolerance of 1.5 mm.
- Beam Characteristics
  - 120 GeV Protons delivered from Main Injector.
  - 4.9×10^{13} ppp every 1.33 seconds (at $\varepsilon_{N,95\%}18\pi$ mm-mrad.)
  - Fractional Loss in Carrier Tunnel less than $5.7\times10^{-6.}$
  - Spot size of 1.3 mm rms on target.
- Environmental Safety and Health
  - Minimize Worker Exposure to Residual Radiation

Beam Parameters

	NuMI Design	NOνA	What it means for NuMI
Beam Power (kW)	400	700	75% more DC beam power (Cooling Issues)
ν Energy Spectrum	Low Energy	Medium Energy	Reconfigure target chase
Cycle time (s)	1.87	1.33	Faster cycle time
Intensity (ppp)	4.0×10^{13}	4.9×10^{13}	20% higher protons/pulse
Spot Size (mm)	1.0	1.3	Larger Spot size on Target

Scope of NuMI Upgrades (1)

- WBS 1.0.3.1 and 2.0.3.1 (Primary Beamline)
  - NuMI Extraction Kicker Power Supply and Cooling
    - Kicker Magnet is OK
  - ❖ Transfer five 3Q120 Quadrupoles from A1 line to NuMI
    - ❖ A1 is pbar injection line from MI to TeV
  - Dipole Power Supply Improvements
  - Upgrades to Profile Monitors

- WBS 1.0.3.2 and 2.0.3.2 (Target Hall Components)
  - Medium Energy Target
  - Baffle
  - Target Carrier
  - Upgrade Hadron Monitor

Scope of NuMI Upgrades (2)

- WBS 1.0.3.3 and 2.0.3.3 (Target Hall Infrastructure)
  - Horn 2 Relocation for Medium Energy
  - Target Pile Air Cooling Upgrade
  - Radiant Heat Loads
  - Horn 1 Stripline Block Cooling
  - Operations Space Planning

- WBS 1.0.3.4 and 2.0.3.4 (NuMI Decay Pipe/Hadron Absorber/Utilities)
  - Decay Pipe Temperature Monitor
  - RAW systems upgrade (Target, Horn 1, Horn 2 , Decay Pipe, Absorber)
  - Absorber Intermediate Cooling Water Upgrade
  - MI-65 Secondary Chilled Water System Upgrade
  - Electrical Utilities Upgrade

NOνA ANU Org Chart

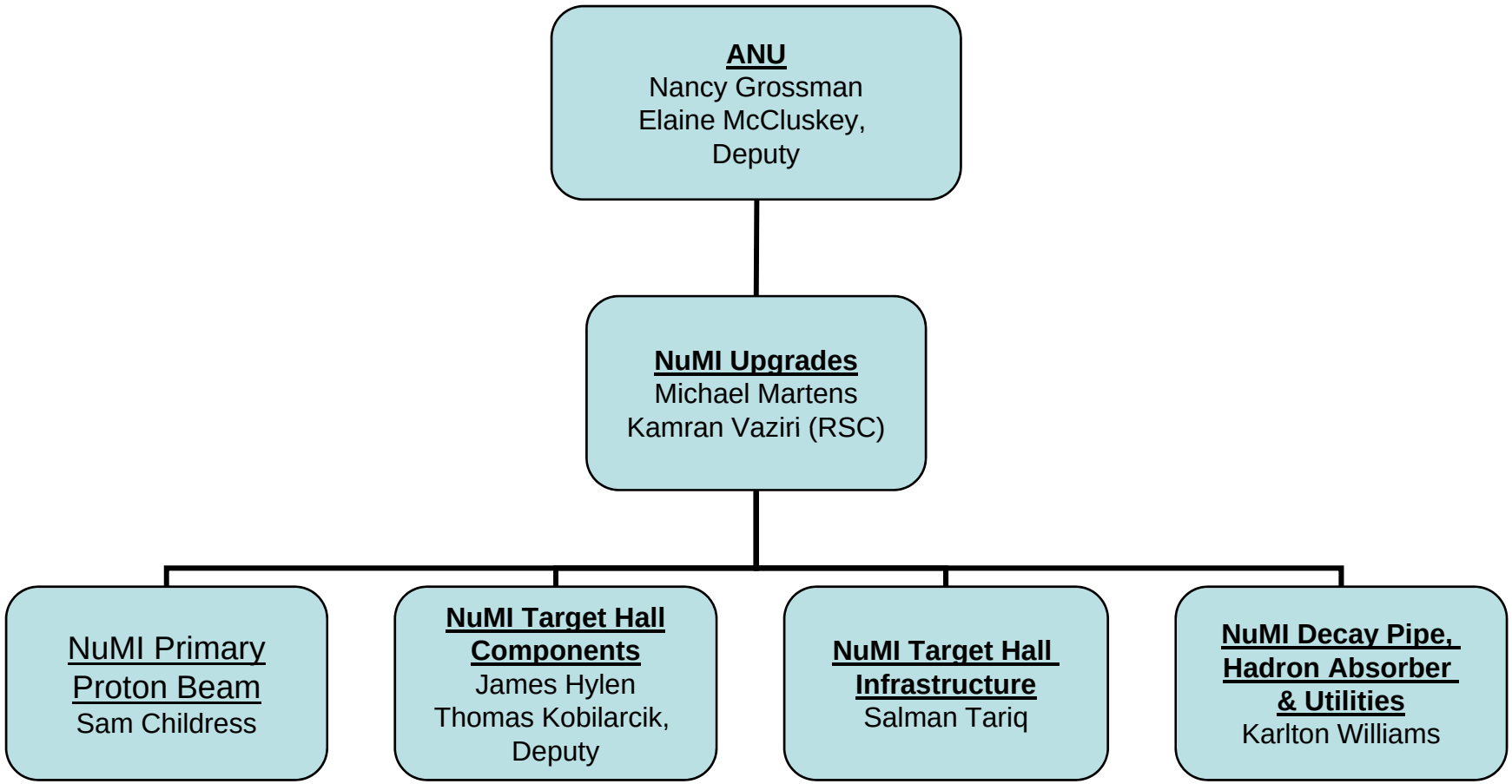

RSC: Radiation Safety Coordinator

Coordination with NuMI Operations

- NuMI Upgrades and Operations
  - Upgrades to the NuMI Facility done regardless of NOνA
  - Coordinated with the NOνA Project
  - Large overlap of people on NOνA and NuMI Operations
  - Breakout talk by Mike Martens is available
- NuMI Operation Tasks
  - Production of horns, targets, and baffles
  - Improve component design and lifetime
  - Reduce radiation exposure
  - Improve remote repair capabilities
  - Space for spent components

Target for Low Energy Configuration

Graphite Fin Core

Water cooling tube

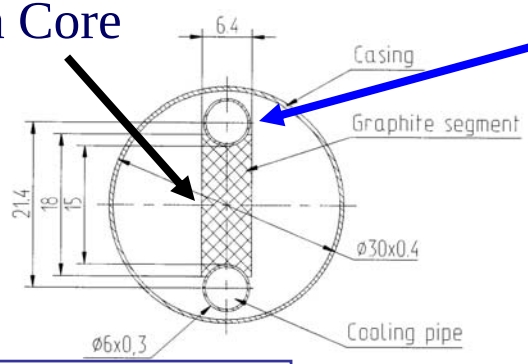

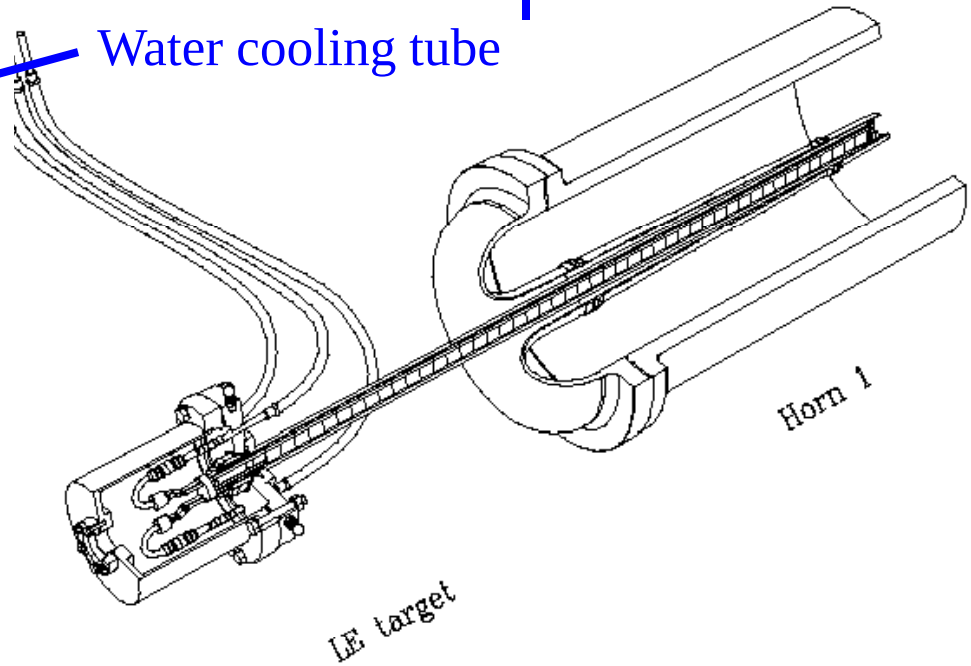

In use now.

Fits within the horn.

Capable of 400 kW

May be OK at ~480 kW

Target for Medium Energy Configuration

IHEP Design

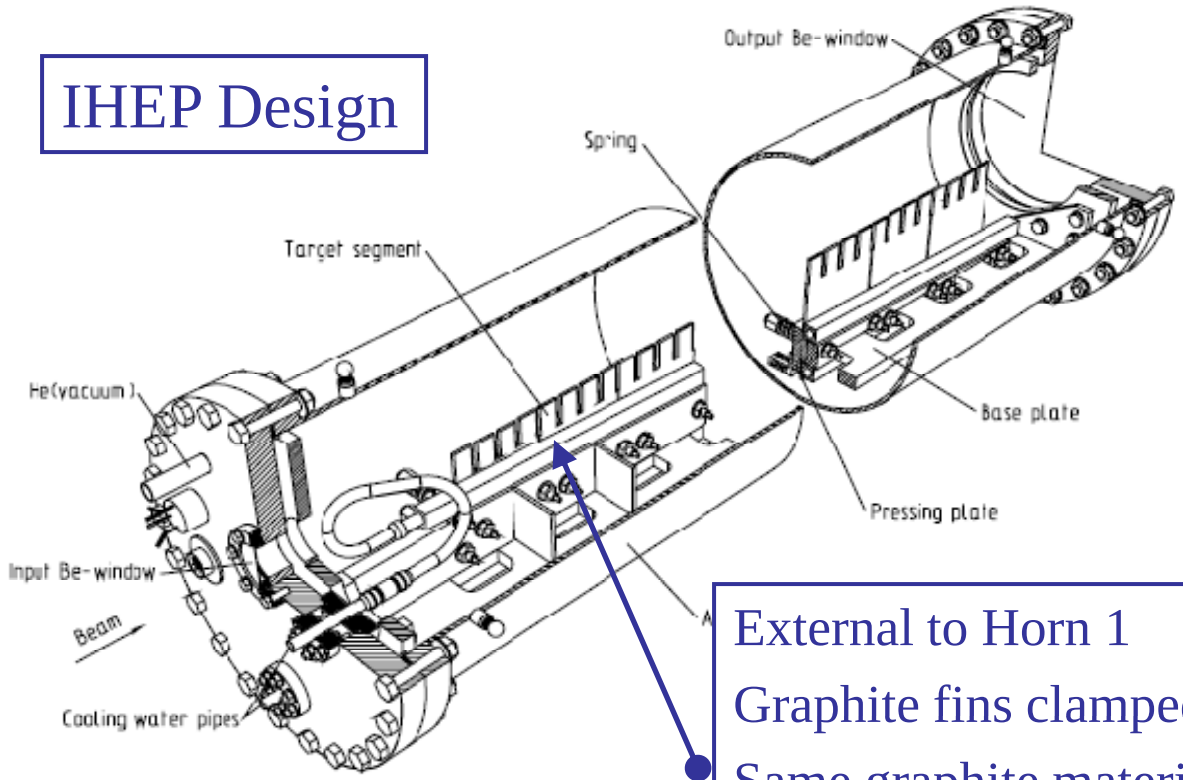

External to Horn 1

Graphite fins clamped with cooling plates

Same graphite material as the LE target

Capable of 700 kW operations

IHEP ME Target Analysis

- IHEP, Protvino report on ME Target
  - 5.5×10^{13} ppp @ 1.2 second rep rate (880 kW)
  - Energy Deposition in the Target
  - Cooling of the Target
  - Stresses in the Target
- Analysis still needed for
  - Target Can cooling
  - Window stress and cooling

Target Segment

Beam

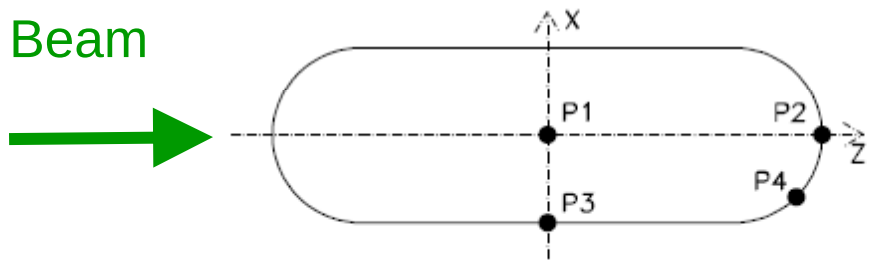

Proton beam intensity, ppp	5.5×10^{13}		
Beam spot size (σ), mm	1.0	1.2	1.5
$P1$	1.8	2.6	4.1
$P2$	1.9	2.4	3.2
$P3$	1.9	2.0	2.6
$P4$	1.2	1.5	2.2

4.9E13/pulse
1.3 mm rms beam size.
Then safety factor is ~1.7

Target Hall Cooling

- Target Chase Temperature
  - –Important for
    - •Understanding Cooling Needs
    - •Component Temperatures
    - •Alignment
    - •Radiant Heat Loads
  - –2-D model predicts Blue blocks can reach 113 °C
  - –3-D MARS simulation of energy deposition is complete
  - –3-D model of Target Chase Temperature is planned

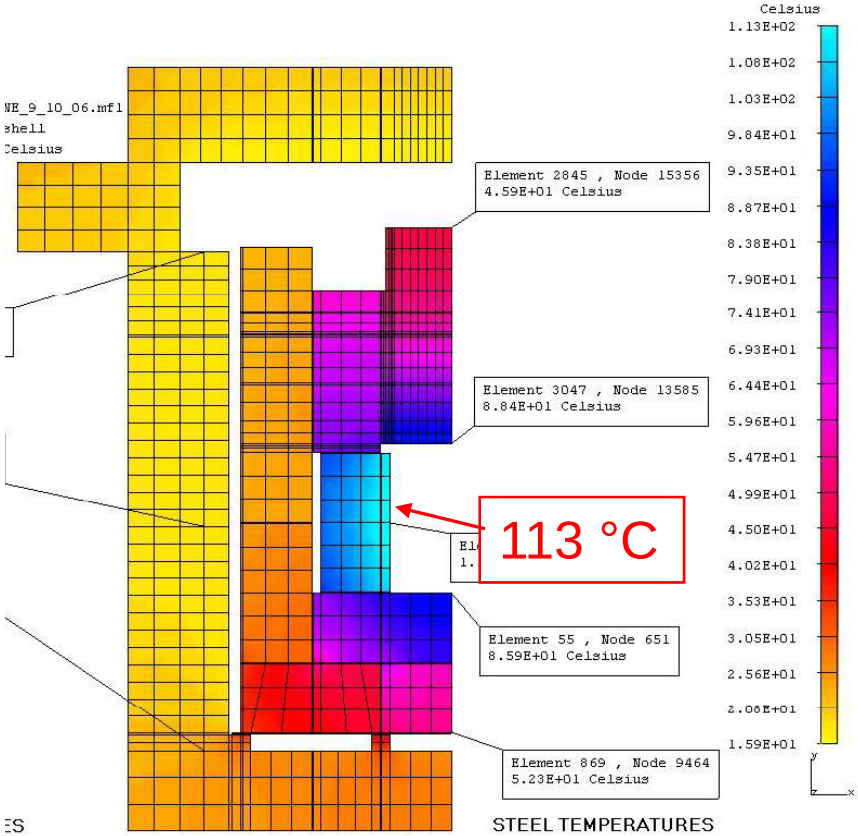

Cross section of Target Chase

Target Hall

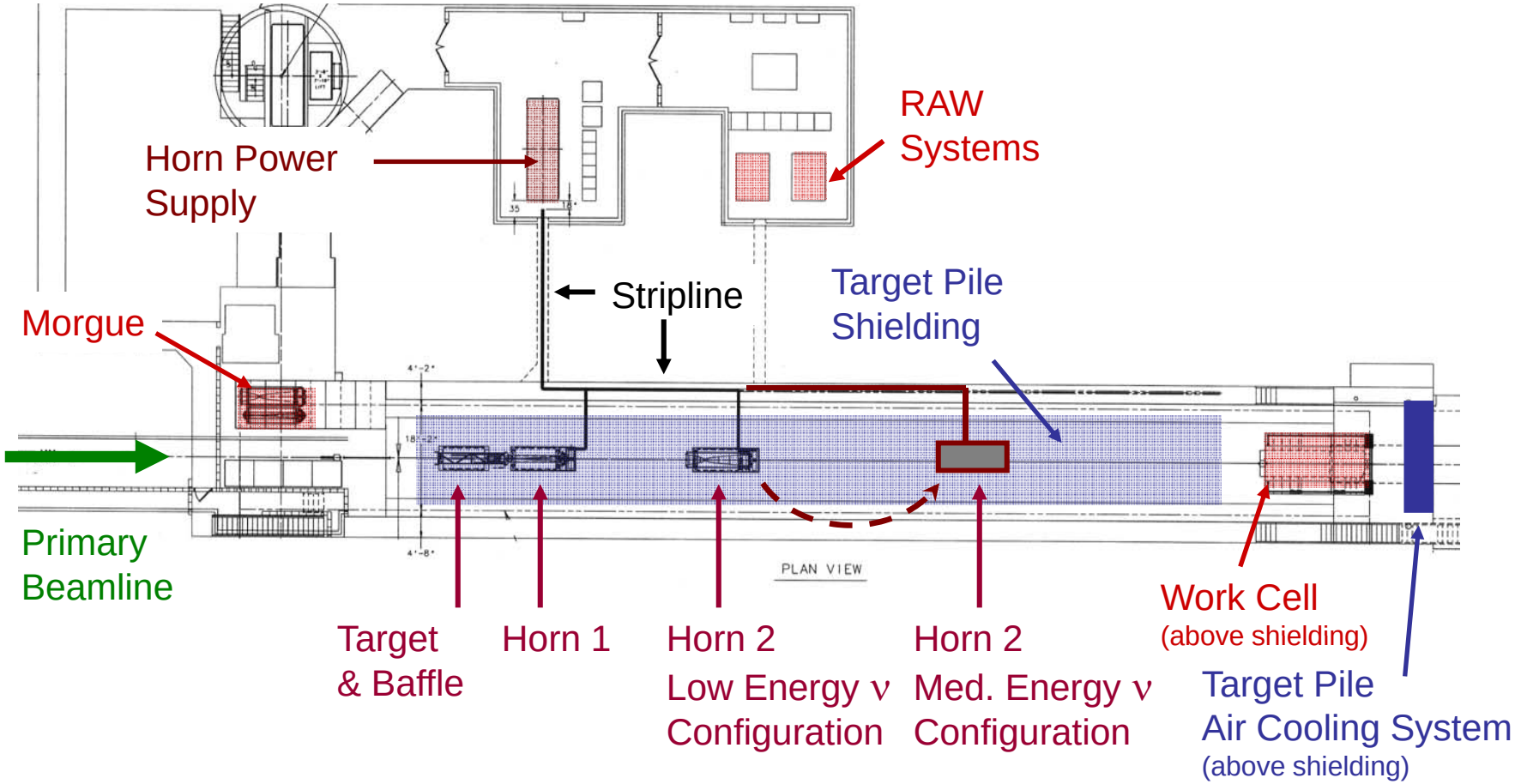
Horn Power Supply
RAW Systems
Stripline
Target Pile Shielding
Morgue
Primary Beamline
PLAN VIEW
Target & Baffle
Horn 1
Horn 2 Low Energy ν Configuration
Horn 2 Med. Energy ν Configuration
Work Cell (above shielding)
Target Pile Air Cooling System (above shielding)

Horn 2 Relocation

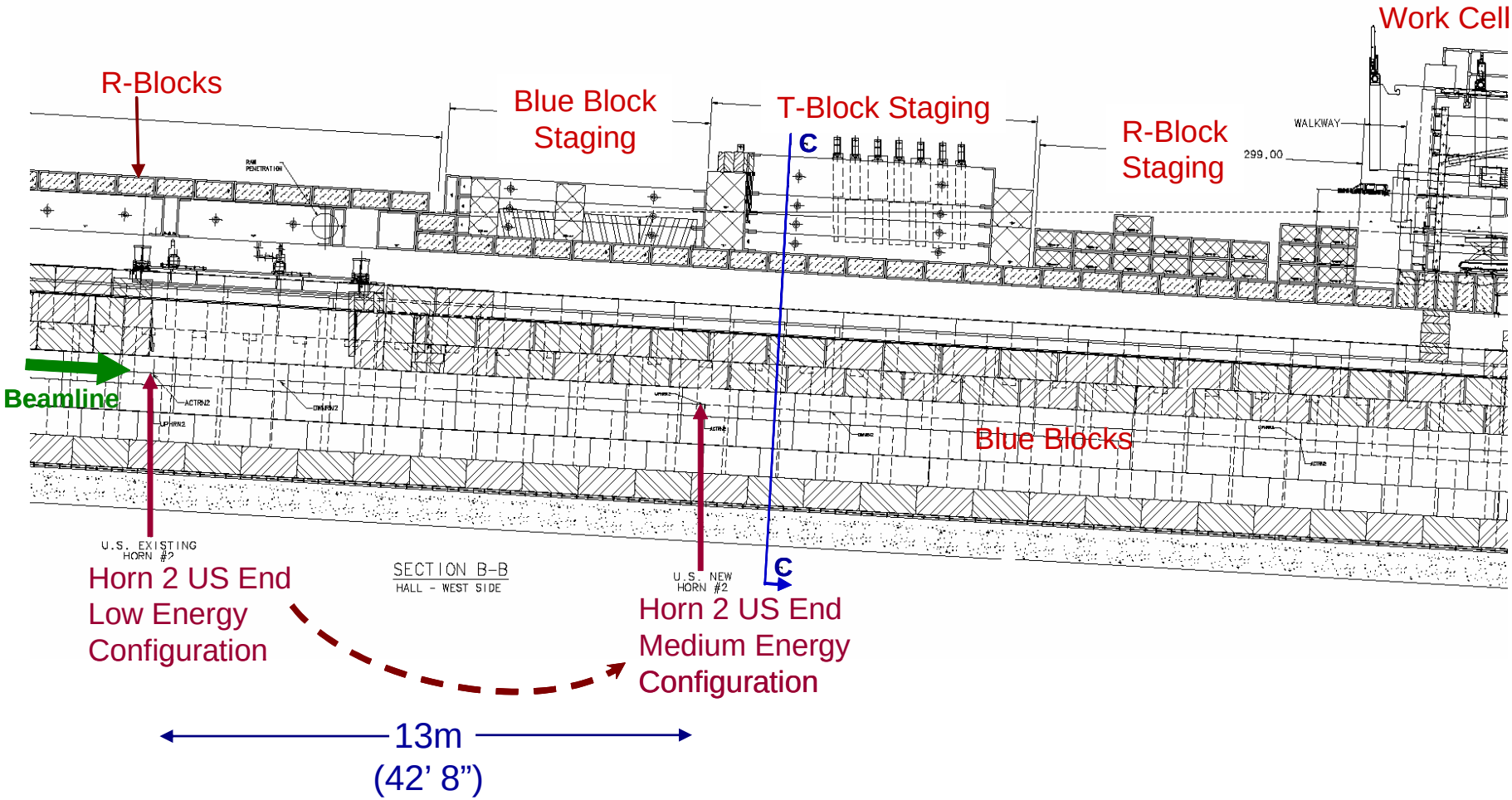

Horn 2 Relocation

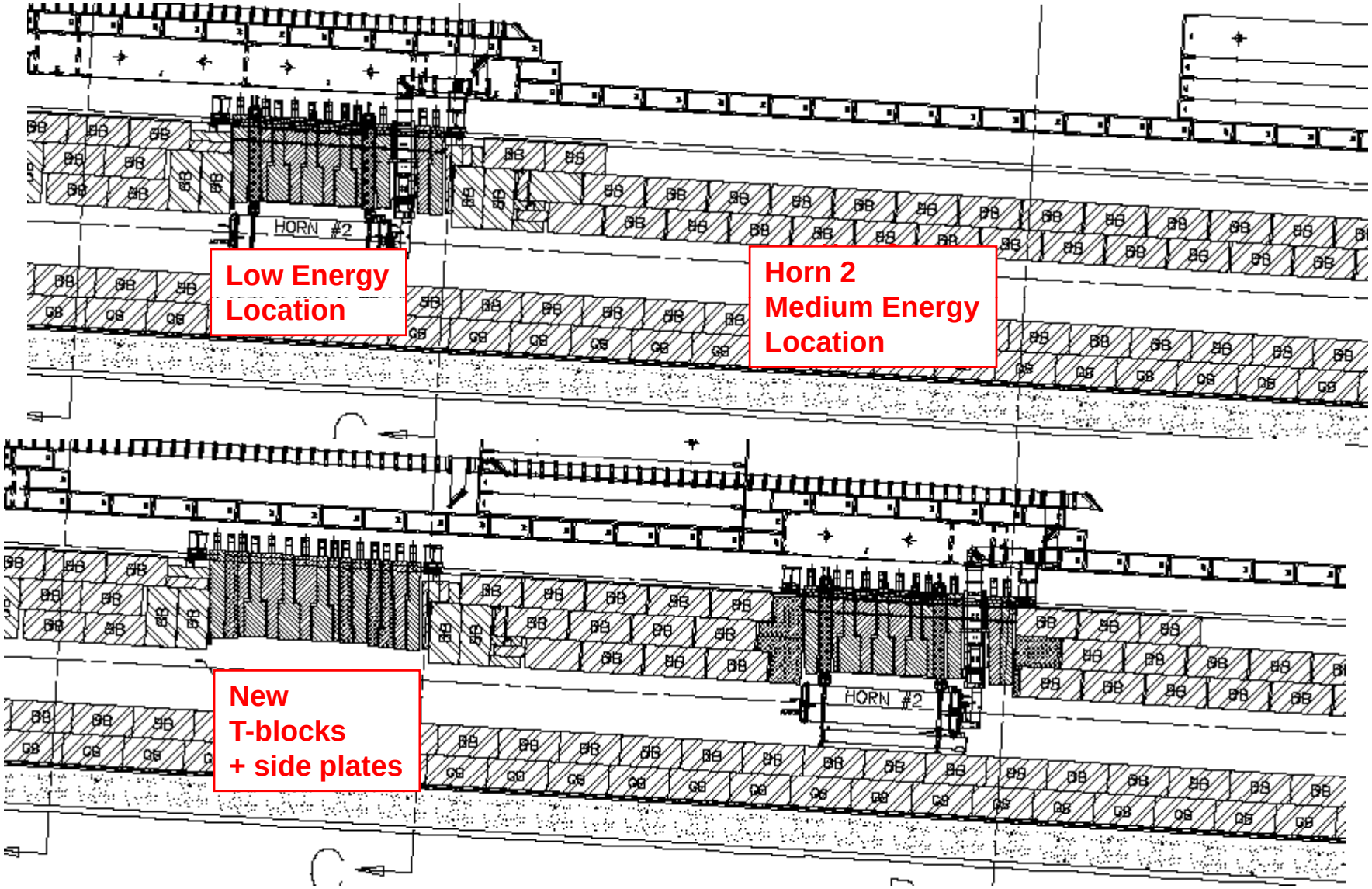

ANU Cooling Systems Scope

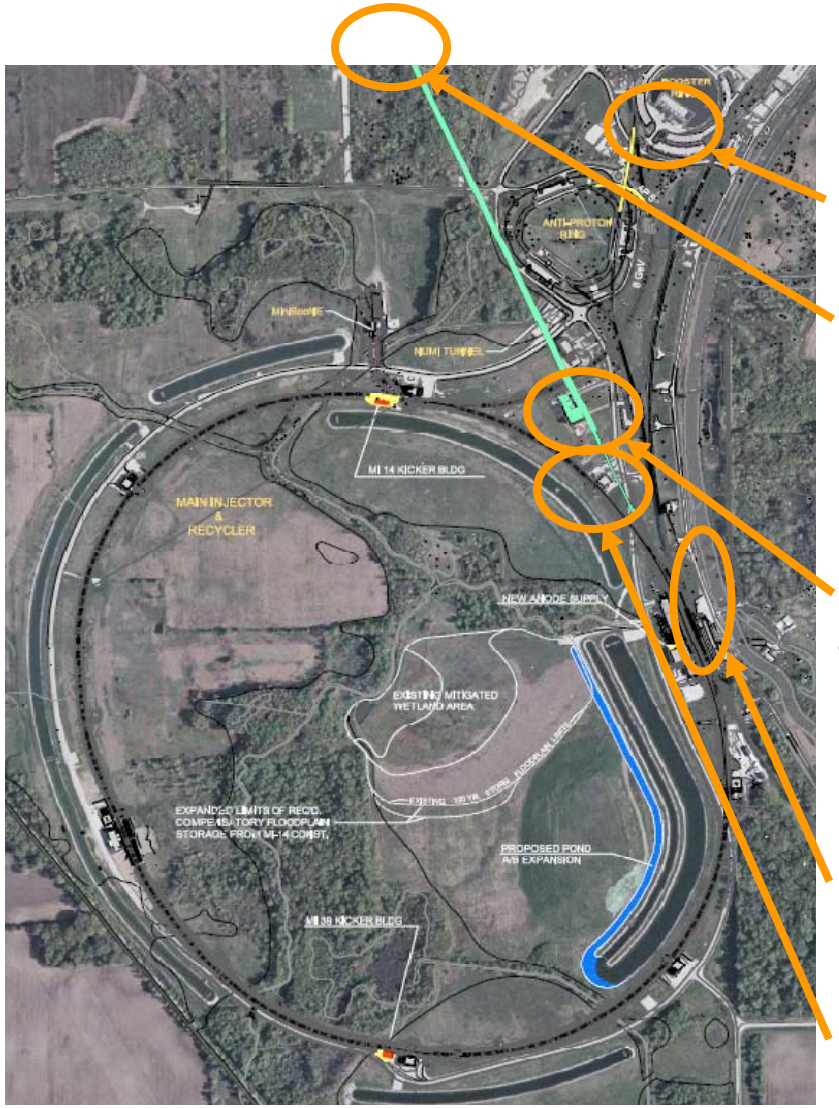

NuMI

CUB ICW for MI-65

Absorber Hall:

Decay Pipe Downstream RAW
Hadron Absorber RAW & Intermediate
NuMI Sump Water

MI-65 & Target Hall:

Target RAW
Horn 1 & 2 RAW
Decay Pipe Upstream RAW

NuMI Extraction Line

MI-62 Service Building

NuMI LCW

Water Cooling System Capacity

Systems served by the MI-62 LCW system.
The capacity of the LCW system is 1.2 MW.

Systems Served by MI-62 LCW (Pond-H)	Estimated Heat Loads (kW) NuMI (400 kW beam power)	Estimated Heat Loads (kW) NOνA (700 kW beam power)
MI-62 LCW Pump	51	51
MI-62 Power Supplies	13	13
MI-NuMI Extraction Stub	453	471
Pre-Target Enclosure	189	196
MI-65 Target Service Bldg	33	40
Horn Power Supplies	12	18
Target Pile Chiller Coil	180	0
Target RAW	20	20
Total	**951**	**809**

Level 4 manager for NuMI (Karl Williams) also responsible for RR and MI water system upgrades. He has the “big picture” in mind.

Value Engineering

- Analysis and initial design reviews for each system
  - Done before proceeding to the design stage.
- Final design reviews for each system.
  - Done before proceeding to procurement.
- Changes since last review
  - Use 3Q120 Quadrupole Magnets from the A1 line. (No need to build new.)
  - Target water cooling bubbler removed from scope. (IHEP analysis shows water hammer is not a problem.)
  - Dummy Module concept re-examined. A less expensive method may be possible.
  - Determined that a complete Horn 1 redesign is not necessary.

Cost Overview NuMI Upgrades

(Fully Burdened FY07 $)

		ANU NuMI Upgrades Cost Estimate $K (FY07$)						
		Estimated Cost (w/Indirects)			Contingency %			Total Project Cost
WBS	Name	M&S	Labor	Total	M&S Cont %	Labor Cont %	Total Cont %	
	NuMI Upgrades	**$2,615**	**$5,052**	**$7,667**	**42%**	**48%**	**46%**	**$11,207**
1.0.3	**NuMI Upgrades Planning, Engineering & Design**	**$114**	**$2,288**	**$2,402**	**56%**	**55%**	**55%**	**$3,731**
1.0.3.1	NuMI Primary Proton Beam	$37	$181	$218	46%	40%	41%	$308
1.0.3.2	NuMI Target Hall Technical Components	$56	$383	$438	59%	65%	65%	$722
1.0.3.3	NuMI Target Hall Infrastructure	$21	$1,321	$1,342	66%	62%	62%	$2,170
1.0.3.4	NuMI Decay Pipe/Hadron Absorber/Utilities	$0	$404	$404	0%	32%	32%	$531
2.0.3	**NuMI Upgrades Construction**	**$2,501**	**$2,764**	**$5,265**	**41%**	**42%**	**42%**	**$7,476**
2.0.3.1	NuMI Primary Proton Beam	$646	$627	$1,273	24%	25%	24%	$1,583
2.0.3.2	NuMI Target Hall Technical Components	$513	$783	$1,295	46%	47%	47%	$1,903
2.0.3.3	NuMI Target Hall Infrastructure	$1,088	$743	$1,832	44%	62%	51%	$2,768
2.0.3.4	NuMI Decay Pipe/Hadron Absorber/Utilities	$255	$611	$866	67%	31%	41%	$1,222

Risk Management

- Risk Registry for all risks is in WelcomRisk®
  - 12 Risks entered with mitigations for this WBS
    - 2 high, 3 moderate, 7 low
- 2 high risks for NuMI is insufficient manpower (NOvA-DocDB-1446)
  - Same people involved in both NOνA ANU and NuMI Operations
  - Shortage of Mechanical Engineers in particular
  - Risk
    - Delay to Schedule
    - Reduced Operational Reliability
  - Mitigations
    - When possible, contract out engineering work
    - Reasonable contingency and schedule float
- 3 moderate risks relate to Target Hall Infrastructure and NuMI Cooling Issues being at the conceptual design level
  - Tasks taking longer than planned or costing more than planned
  - Reasonable contingency and schedule float

ANU Schedule Overview

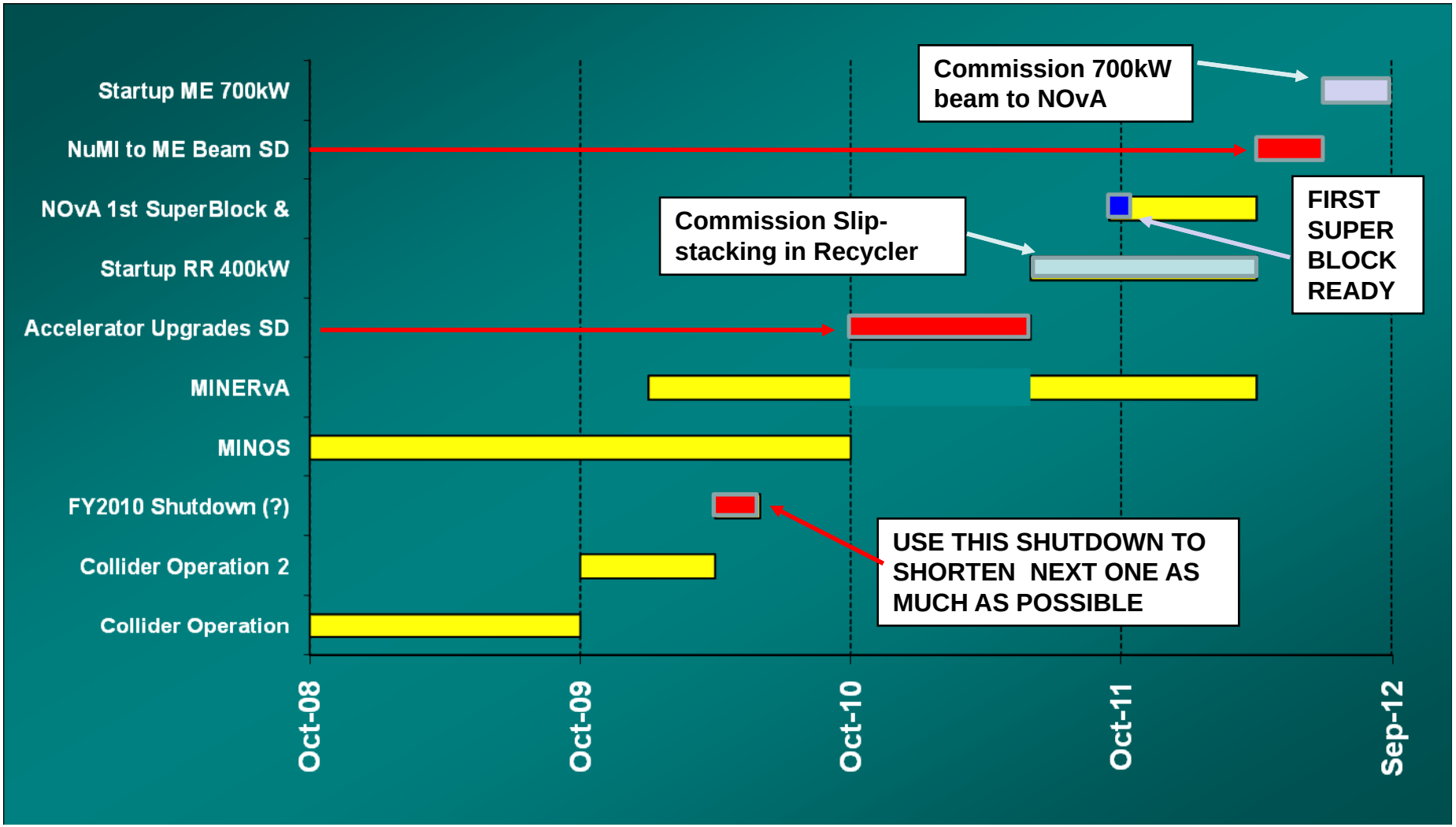

WBS 1.0.3 Milestones

Activity ID	Activity Desc.	Date	Milestone Tier
L.2 -- WBS L2 Manager's Milestone			
1.0.3.3.5.11	NuMI FEM 3-D Thermal Analysis Complete	20Sep07	L.2
1.0.3.3.5.1	NuMI Analyze Predicted Block Temperatures Effect on Chase Components Complete	01Nov07	L.2
1.0.3.1.5.2	NuMI Profile Monitor Conceptual Design Review Complete	03Mar08	L.2
1.0.3.1.5.3	NuMI Profile Monitor Technical Design Review Complete	24Jul08	L.2
1.0.3.2.5.1	NuMI Target, Baffle & Carrier Initial Design Review Complete	21Oct08	L.2
1.0.3.2.5.9	NuMI Hadron Monitor Initial Re-design Complete	04Nov08	L.2
1.0.3.2.5.3	NuMI Final Design of Target Carrier Complete	19Mar09	L.2
1.0.3.3.5.3	NuMI Target Chase Cooling Design Complete	06Jul09	L.2
1.0.3.1.5.1	NuMI Charging PS Upgrade Design Complete	28Oct09	L.2
1.0.3.3.5.2	NuMI Shielding Assessment Complete	05Mar10	L.2

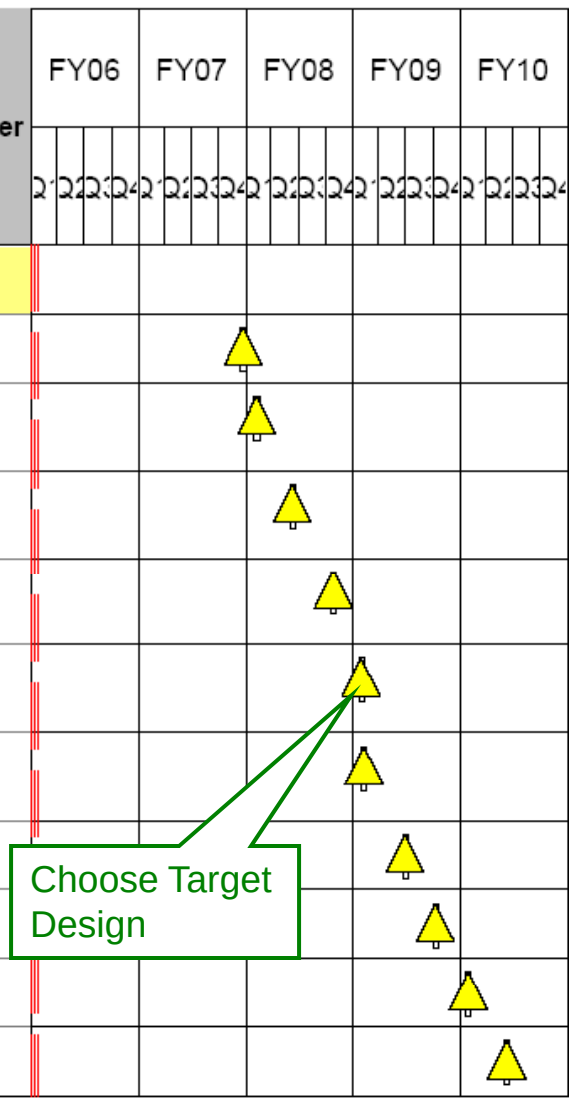

WBS 2.0.3 Milestones

Activity ID	Activity Desc.	Date	Milestone Tier
L.2 -- WBS L2 Manager's Milestone			
2.0.3.2.3.7	NuMI IHEP ME Target Accord Signed	09Jan09	L.2
2.0.3.2.3.1	NuMI Begin Baffle Procurement	13Aug09	L.2
2.0.3.2.3.2	NuMI Baffle Delivered	18Jun10	L.2
2.0.3.4.4.2	NuMI RAW Systems Mods Complete	01Nov10	L.2
2.0.3.4.4.3	NuMI Cooling Water (Non-RAW) Mods Complete	01Dec10	L.2
2.0.3.3.4.2	NuMI Installation of Target Chase Cooling Complete	02Dec10	L.2
2.0.3.1.5.1	NuMI Charging PS Upgrades Testing Complete	29Dec10	L.2
2.0.3.2.3.4	NuMI Target Carrier Delivered	16Mar11	L.2
2.0.3.2.3.8	Replacement Hadron Monitor Delivered	26May11	L.2
T.3 -- Fermilab Director or NOVA Management Milestone			
2.0.3.3.4.1	NuMI Shielding Blocks, Dummy Module & Carriage Complete	09Jul10	T.3
2.0.3.3.4.3	NuMI Stripline Assembly Complete	30Aug10	T.3
2.0.3.1.5.2	NuMI Primary Beamline Ready for Faster Cycle Time	21Feb11	T.3
2.0.3.2.3.3	NuMI ME Target/Carrier/Baffle Assembly Complete	26Sep11	T.3

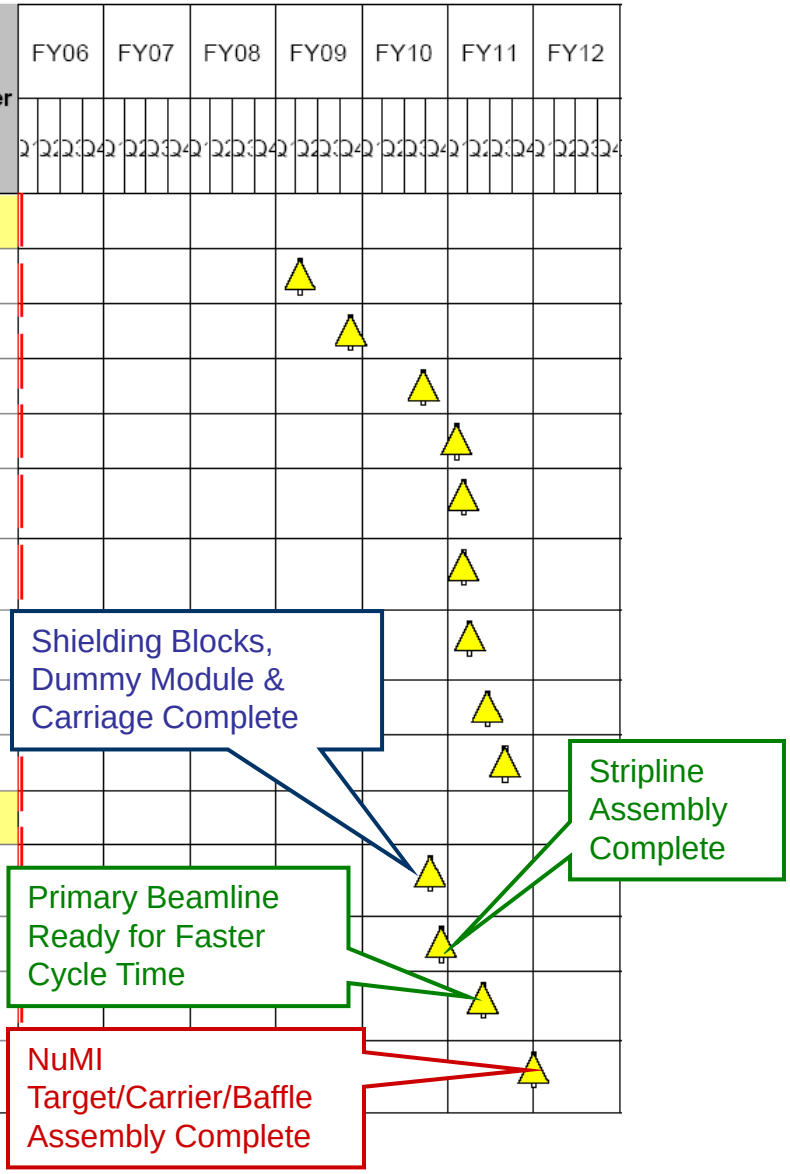

Conclusions

(Fully Burdened FY07 $)

- Upgrade NuMI Facility
  - Based on experience with NuMI beamline
  - Upgrade Primary Beamline
  - New Medium Energy Target
  - Relocate Horn 2
  - Target Chase and Equipment Cooling
- Overall Cost $7.7M (no contingency)
  - Contingency is 46%
  - Cost is spread out among many tasks
- Risks
  - Biggest risk is lack of sufficient manpower
  - Risk managed with contingency, resource leveling

Backup Slides

Shutdown Plan

- **Accelerator Shutdown**
  - NuMI begins preparation for 700 kW
    - Install Magnets in Primary Beamline
    - Upgrade Target Pile Cooling
    - Prepare for Horn 2 Relocation (Extend Stripline; Modify Shielding)
    - Upgrade RAW Systems
    - Upgrade Work Cell
  - NuMI capable of only ~480 kW operations after first shutdown
  - NuMI shutdown work takes 4 months (5½ for rest of project)
- **Run for MINER νA in Low Energy Configuration**
- **NuMI Shutdown**
  - NuMI converts to Medium Energy Configuration
    - Relocation of Horn 2
    - Replace Horn 1 with New Design
    - Replace Low Energy Target with Medium Energy Target
    - (Possibly Replace Horn 1 Hanger)
  - Shutdown work can be completed in 6 weeks
    (10 weeks if Horn 1 Hanger needs replacing)

Review Recommendations (1)

Recommendation	Status/Action
Adding an input to the beam permit system to check for "beam present without muons downstream of the hadron absorber" (indicative of the presence of untargeted beam) is a worthwhile addition.	**Status: Complete** Incorporating the hadron monitor into the beam abort permit is part of the project and part of the WBS.
It would be prudent to plan any Phase I work in a manner that does not necessitate undoing and/or repeating it for Phase II. This is particularly true for RAW (Radioactive Water) systems.	**Status: Complete** We will make estimates of the demands on the water systems for upgrades beyond the first phase of the upgrade. This will be considered during the scheduled design reviews of the water systems.
The temperature distribution of the fin structure for the medium energy target should be carefully analyzed due to the longer distance between the beam impact and the water cooling.	**Status: IHEP work needs to be reviewed by Fermilab Engineering.** A thorough analysis of the medium energy target was completed by IHEP. The conclusions of their report suggest the fin design is adequate for the NuMI upgrades. The report needs to be reviewed by Fermilab engineers.

Review Recommendations (2)

Recommendation	Status/Action
Several serious logistic problems have already been identified both at NuMI and at the Target Storage Building (TSB). Measures to address this problem should be continued. As needed, elements of this may be implemented prior to the 2009 down time.	**Status: Complete** Tasks for the Target Hall Operations Space Planning are already in the WBS structure. Where possible, these tasks will be integrated with existing NuMI operations.
The radiation safety analysis will need to be refined as the design proceeds.	**Status: Complete. Added a "Prepare Shielding Assessment Document" to the WBS.** Much of the radiation safety analysis is a part of the work cell upgrade and the radioactive component removal plan. The organization chart includes a Radiation Safety Coordinator (RSC) as a level 2 manager for the NuMI upgrades.