NuMI Upgrades and Operations

Mike Martens
Fermilab Accelerator Division

CD-2/3a Director's Review of NOνA
June 4-6, 2007

Coordination of NOνA Project and NuMI Upgrades & Ops

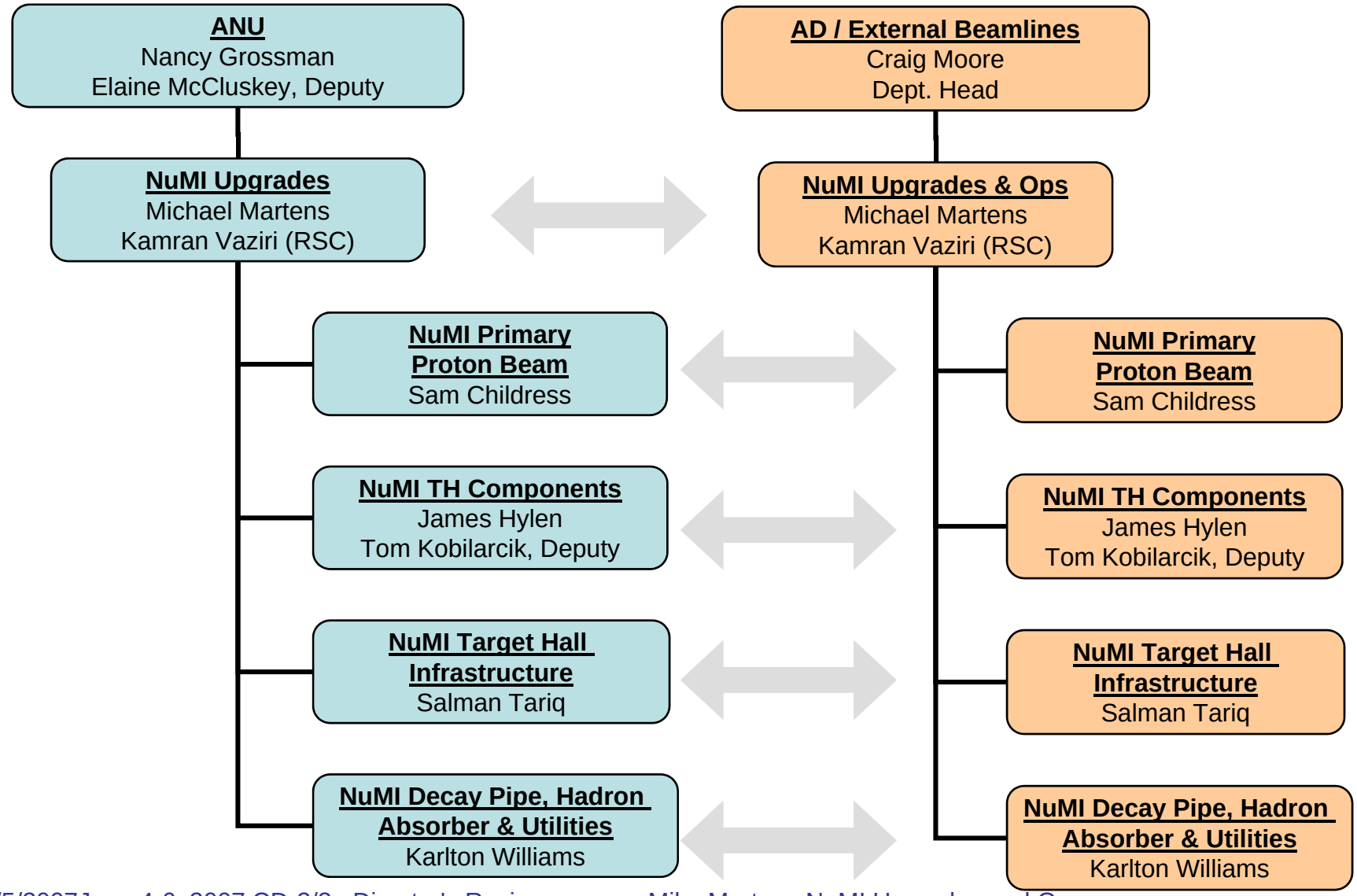

AD/External Beamlines Dept

- AD/ External Beamlines Responsible for:
  - Commissioning and Operating the NuMI Facility
  - Building Targets and Horns
  - Maintaining a Safe Working Environment
    - Remote Handling of Radioactive components
  - Removal and Storage of Used Components (i.e. Targets and Horns)

Usual tasks for running any Neutrino Beamline …

- Coordinating these tasks with the NOνA Project
  - Commissioning in the Medium Energy Configuration
  - Operating at 700kW Beam Power
  - Target and Horn Production Consistent with NOνA
  - Radioactive Component Repair/Removal Plan (RCR/RP) Consistent with NOνA

… are the same tasks needed to run NuMI for NOνA

Rest of the talk:

How we are managing the AD Ext Beams ⇔ NOνA coordination

Explain how Horns and RCR/RP are consistent with NOνA

Goals for NuMI

- Neutrino beam for MINOS
  - Achieved to date:
    - 3.2×10^{20} Protons on Target
    - 320 kW of beam power (when not stacking pbars)
    - 4.0×10^{13} Protons/Pulse (during tests of multi-batch slip stacking)
  - With MI multi-batch slip stacking, run at 400 kW
- Neutrino beam for MINERνA
  - About 1 year in the low energy configuration
- Neutrino beam for NOνA
  - 700 kW in the medium energy configuration
  - 6×10^{20}/year for six years

Beam Parameters

	Present Conditions	Proton Plan	NOνA
Beam Power (kW)	**190**	**320**	**700**
ν Energy Spectrum	**Low Energy**	**Low Energy**	**Medium Energy**
Cycle time (s)	**2.4**	**2.2**	**1.33**
Intensity (ppp)	**2.45×10^{13}**	**3.7×10^{13}**	**4.9×10^{13}**
Spot Size (mm)	**1**	**1**	**1.3**
PoT/yr to NuMI	**2×10^{20}**	**3×10^{20}**	**6×10^{20}**

Reliable & Safe Operations

- Construct spare Targets and Horns
  - These are consumables which last ~1year.
  - Now using the 2nd low energy target
  - Still using the 1st Horn 1 and the 1st Horn 2 (>15 million pulses)
    - We were able to repair Horn 1 and Horn 2 when broken.
- Maintain a safe working environment
  - Limit exposure to radioactivity
  - Improve remote handling capability (Tele-manipulators)
  - Shielded Work Cell
- Safely remove and store used components
  - Limited space for storage in the Target Hall Morgue
  - Transportation equipment and coffins
  - Storage in designated locations

WBS for NuMI Upgrades and Ops

NuMI Upgrades & Ops 5/31/07

Uniq	WBS	Name
1	1	NuMI Upgrades and Ops (Off Project)
2	1.1	NuMI Target Hall Technical Components
3	1.1.1	Target
16	1.1.2	Horns
279	1.1.3	Hadron Monitors
53	1.1.4	Target Hall Components Design Review
56	1.2	NuMI Target Hall Infrastructure
57	1.2.1	Horn2 Re-location to Medium Energy
60	1.2.2	Modules
94	1.2.3	Radioactive Component Repair/Removal Plan
95	1.2.3.1	Work Cell Upgrade
114	1.2.3.2	Coffins
122	1.2.3.3	Transport Equipment
131	1.2.3.4	Morgue Storage
139	1.2.3.5	Plans & Preparation for the Event of a Crane F
726	1.2.3.6	RCRP Ongoing Operations
140	1.2.4	NuMI Decay Pipe/Hadron Absorber/Utilities
707	1.3	Target Hall General Operations
831	1.3.1	General on-going miscellaneous maintenance and
736	1.3.2	Component repairs/upgrades
738	1.3.3	RAW systems repairs/upgrades
740	1.3.4	General Target Hall repairs/upgrades
812	1.4	On Project Links

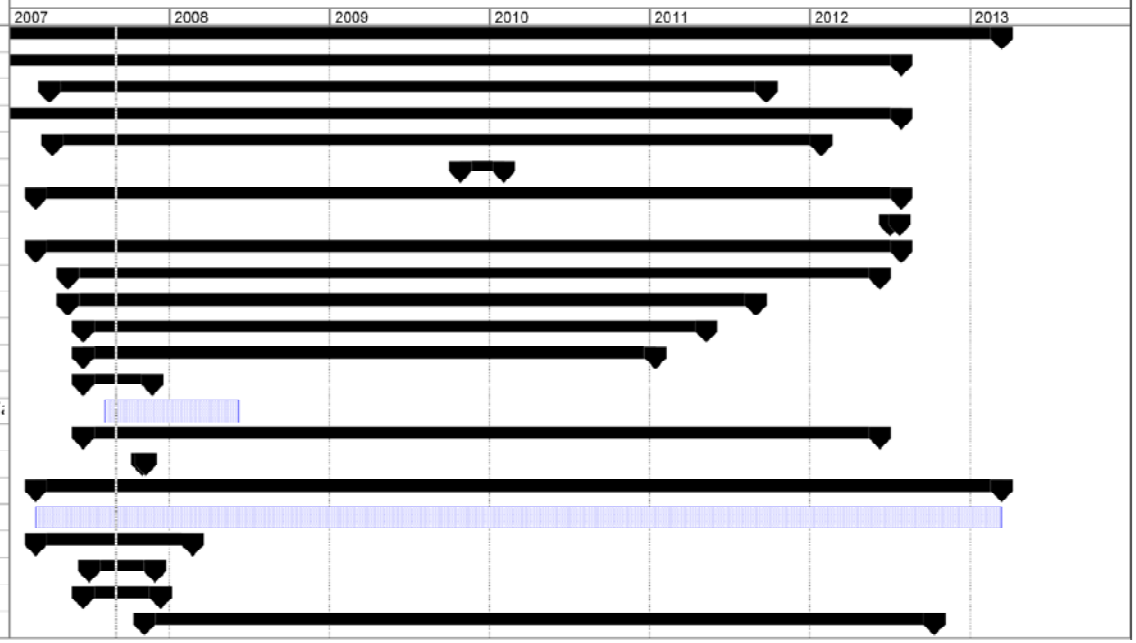

Cost Estimates

($k, M&S, Escalated)

1	NuMI Upgrades and Ops (Off Project)	$1,442	$1,130	$708	$2,689	$737
1.1	NuMI Target Hall Technical Components	$1,349	$995	$690	$1,547	$416
1.1.1	Target	$43	$203	$51	$67	$166
1.1.2	Horns	$1,268	$678	$517	$1,376	$250
1.1.3	Hadron Monitors	$38	$113	$121	$104	$0
1.1.4	Target Hall Components Design Review	$0	$0	$0	$0	$0
1.2	NuMI Target Hall Infrastructure	$70	$118	$18	$1,142	$321
1.2.1	Horn2 Re-location to Medium Energy	$0	$0	$0	$0	$0
1.2.2	Modules	$20	$23	$18	$55	$62
1.2.3	Radioactive Component Repair/Removal Plan	$50	$95	$0	$1,087	$259
1.2.3.1	Work Cell Upgrade	$15	$20	$0	$834	$215
1.2.3.2	Coffins	$0	$0	$0	$133	$41
1.2.3.3	Transport Equipment	$0	$0	$0	$120	$3
1.2.3.4	Morgue Storage	$15	$0	$0	$0	$0
1.2.3.5	Plans & Preparation for the Event of a Crane Failure	$15	$16	$0	$0	$0
1.2.4	NuMI Decay Pipe/Hadron Absorber/Utilities	$0	$0	$0	$0	$0
1.3	Target Hall General Operations	$23	$17	$0	$0	$0
1.3.1	General on-going miscellaneous maintenance and repair	$0	$0	$0	$0	$0
1.3.2	Component repairs/upgrades	$10	$17	$0	$0	$0
1.3.3	RAW systems repairs/upgrades	$4	$0	$0	$0	$0

Common Milestone Links

Milestone Name	Date	Date is driven by	Reason for using a link to off Project
Start 2007 Shutdown	8/6/2007	Lab Schedule	Maintain consistent shutdown dates.
Finish 2007 Shutdown	9/28/2007	Lab Schedule	Maintain consistent shutdown dates.
Start 2008 Shutdown	6/2/2008	Lab Schedule	Maintain consistent shutdown dates.
Finish 2008 Shutdown	7/28/2008	Lab Schedule	Maintain consistent shutdown dates.
St Accelerator Upgrades Shutdown	10/1/2010	NOvA/ANU	Maintain consistent shutdown dates.
Fin Accelerator Upgrades Shutdown	6/6/2011	NOvA/ANU	Maintain consistent shutdown dates.
St NuMI Upgrades Shutdown	4/2/2012	NOvA/ANU	Maintain consistent shutdown dates.
Fin NuMI Upgrades Shutdown	7/2/2012	NOvA/ANU	Maintain consistent shutdown dates.
Off-Project: Horn 1 (ANU) Installed in Chase	4/23/2012	NOvA/ANU	Links the installation of Horn 1 (an off project task) with the NOvA ANU schedule
Off-Project: Modified Horn 1 Ready for Installation	4/2/2012	NOvA/ANU	Links completion of the Horn 1 (an off project task) with the NOvA schedule
Analyze predicted block temperatures' effects on chase components complete	11/11/2008	NuMI Upgrades & Ops	The Horn and Horn Module analysis are off project tasks, but depend on the ANU calculations of the Blue Block temperatures.
FEM 3-D Thermal Analysis complete	9/20/2007	NuMI Upgrades & Ops	Analysis of the horn and horn modules is off project, but depends on the 3-D Finite Element Analysis (FEA) being completed on project.
MOU for Hadron Monitor (ANU) Complete	1/7/2009	NOvA/ANU	Links the purchase of the upgraded (ANU) hadron monitor with the off project purchase of the spare hadron monitor.

Common Milestone Links

Milestone Name	Date	Date is driven by	Reason for using a link to off Project
IHEP ME Target Construction Accord Signed	12/29/2008	NOvA/ANU	Links the purchase of production target to the off project purchase of the spare target.
Off Project: RCRRP - Work Cell & Equipment Ready for ANU Operation	7/2/2012	NOvA/ANU	The Work Cell and Radioactive Component Removal Plan (RCRP) are off project activities. The Work Cell needs to be capable of handling ANU operations by the end of the NuMI shutdown.
Off-Project: Radioactive Component Repairs/Removal Conceptual Design Review Complete	6/2/2008	NuMI Upgrades & Ops	This milestone is used to monitor progress on the RCRP tasks that are occurring as part of operations. The conceptual design review is an off project task, but input from the ANU project is needed.
Off Project: RCRRP Equipment & Procedures Ready for ANU Operations	7/2/2012	NOvA/ANU	The Radioactive Component Removal Plan (RCRP) is an off project task, but needs to be ready before we start ANU operations.
Off Project: Conceptual Design of the Profile Monitors is Complete	3/1/2008	NuMI Upgrades & Ops	Links the development of the profile monitors (an off project task) with the NOvA ANU schedule

NuMI Beamline

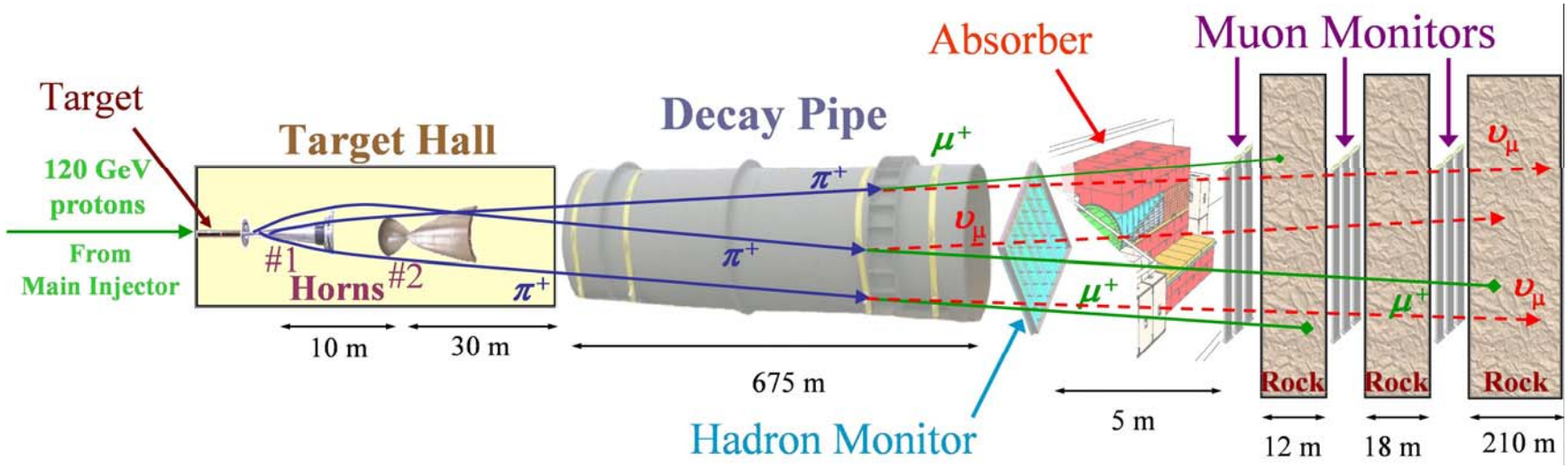

- 120 GeV Protons delivered from the Main Injector.
- Target & Horn position (optics) configurable to change the neutrino energy spectrum.
- Designed for 400 kW proton beam power on target.

Achieved to date in the low energy configuration for MINOS: 3.2×10^{20} POT, 320 kW beam power, and 4.0×10^{13} Protons/pulse

Integrated Protons

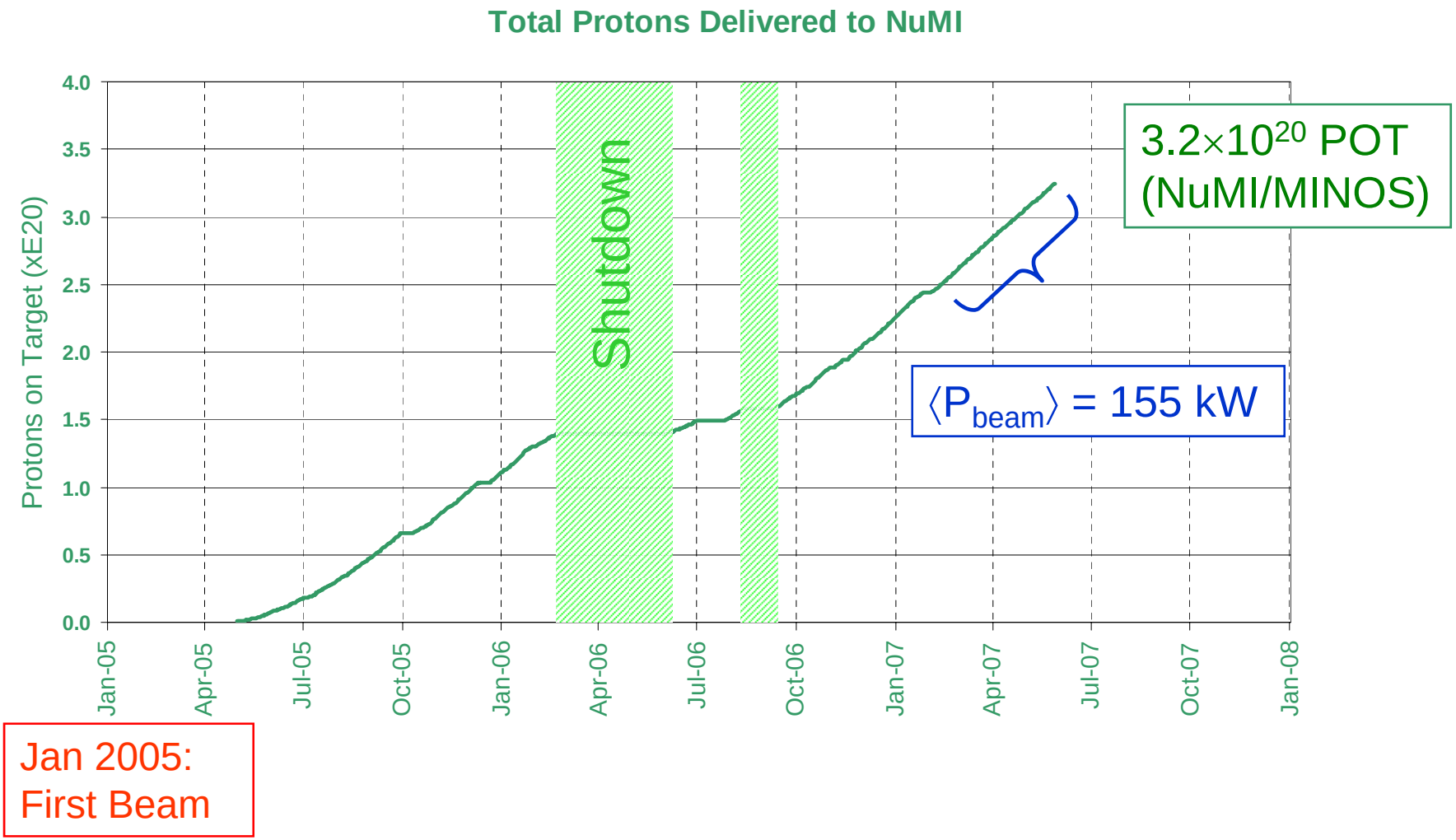

Jan 2005:
First Beam

Magnetic Horns

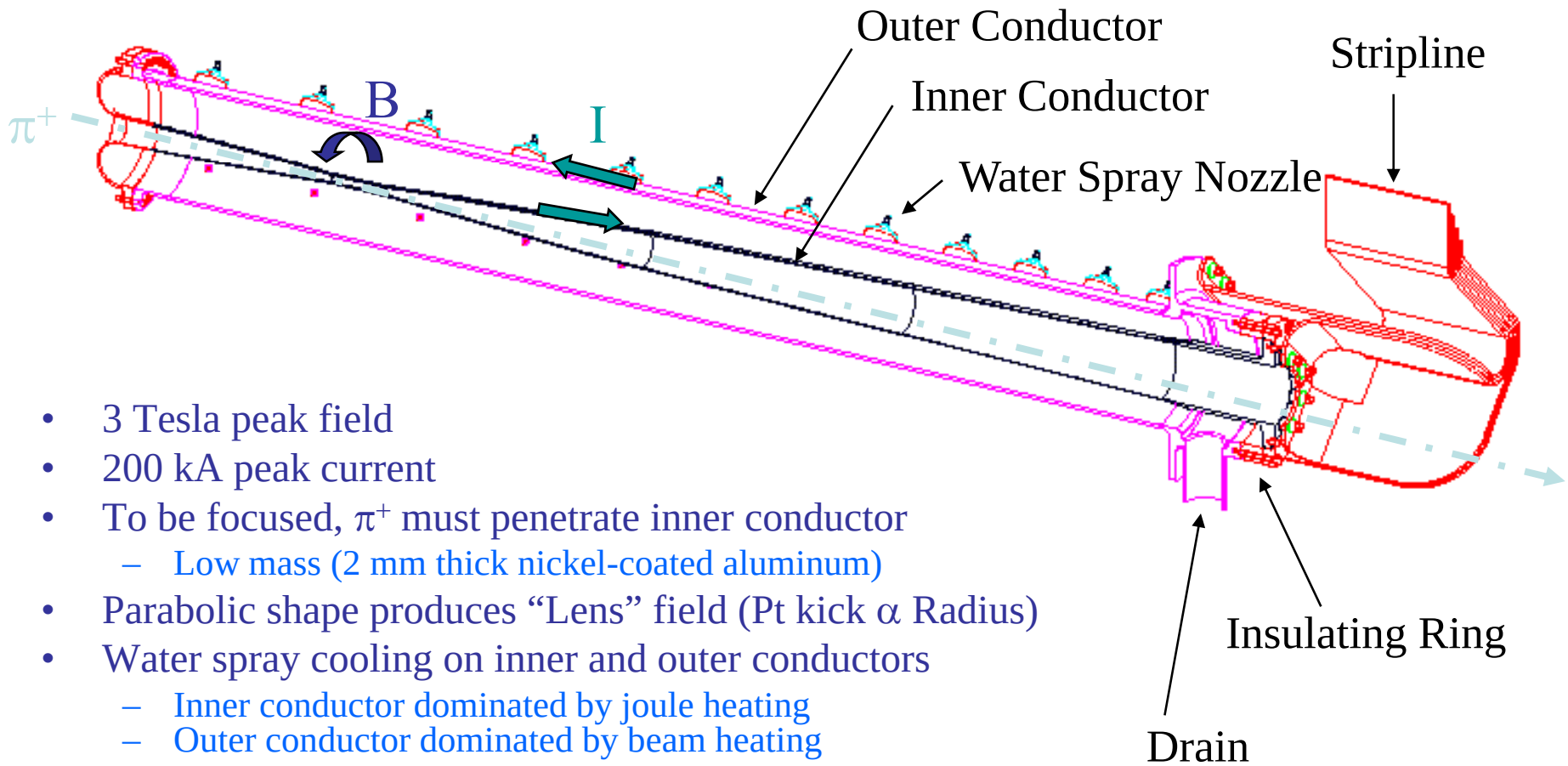

- 3 Tesla peak field
- 200 kA peak current
- To be focused, π^+ must penetrate inner conductor
  - Low mass (2 mm thick nickel-coated aluminum)
- Parabolic shape produces "Lens" field (Pt kick α Radius)
- Water spray cooling on inner and outer conductors
  - Inner conductor dominated by joule heating
  - Outer conductor dominated by beam heating
- 3 m long focusing region
  - Achieved ~ 0.1 mm radial tolerance after weld

Horn Inner conductors

Parabolic inner conductors:
- 3 Tesla max. magnetic field
- 3 m active length each horn

Inner conductors welded together at FNAL by lead engineer Kris Anderson

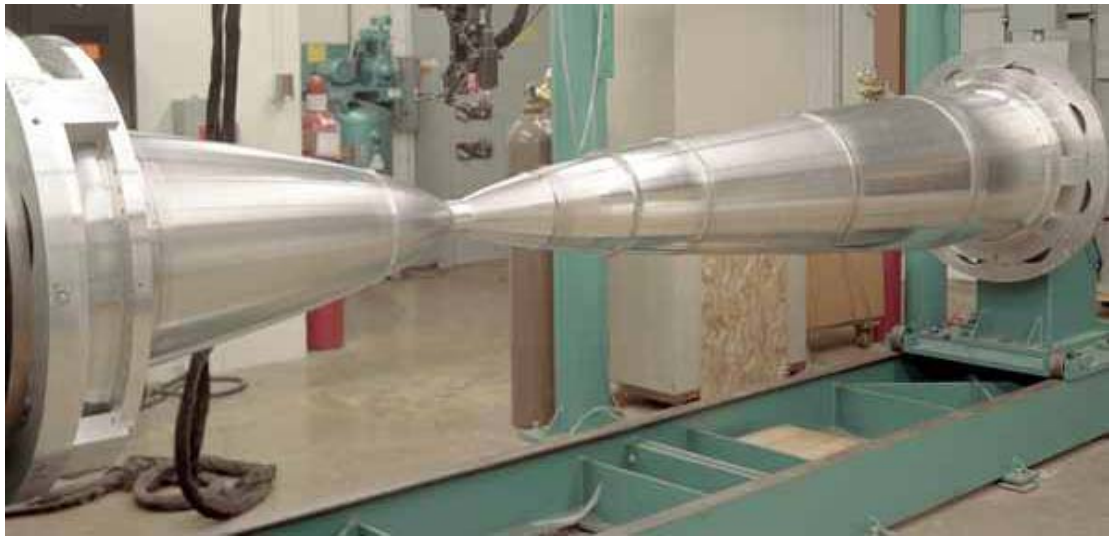

Spares Horns and Target

HORNS	PH1-00	PH1-01	PH1-02	PH1-03	PH1-04	PH1-05		PH2-01	PH2-02	PH2-03	PH2-04
in use	**proto**	**in use**						**in use**			
fiducialize (survey)											
instrumentation											
water tank, hangers											
test pulse			2/3								
stripline									silvered		
water lines etc											
I.C.+O.C assem											
O.C. silvered											
O.C. coated											
O.C. welds											
O.C. machined											
O.C. blanks											
I.C. silvered											
I.C. coated											
I.C. welds			7/7	3/7	3/7	3/7			6/6	5/6	
I.C. machined											5/7
I.C. blanks											
					700kW	**700kW**					**700kW**

TARGETS	NT-01	NT-02	NT-03	NT-04
in use	**stuck**	**in use**		
fiducialize (survey)	**in**			
instrumentation	**H.E.**			
hangers	**posn.**			
mount target + baffle				
fab carrier				
fiducialize target				
fab target + baffle				ordered

Color code	
	Used
	Done
	In progress
	to do

Horn Spare Production

- PH1-01, PH2-01
  - Horns 1&2 in use since start of NuMI ops
  - Survived well – ceramics break on each of the horns
- PH1-02, PH2-02
  - First set of spare horns
  - Complete in a few months
- PH1-03, PH2-03
  - Will be standard (thick) OC
  - Inner conductors welded
  - 75% finished this year; final 25% complete in FY08
- PH1-04, PH2-04
  - **Will be thin conductor?**
  - 50% completed in FY08
  - Final 50% in FY09

Designing for thin inner conductor would delay 3rd set of horns by months. Choose to continue with standard design

Initial 700 kW FEA of Horn 1

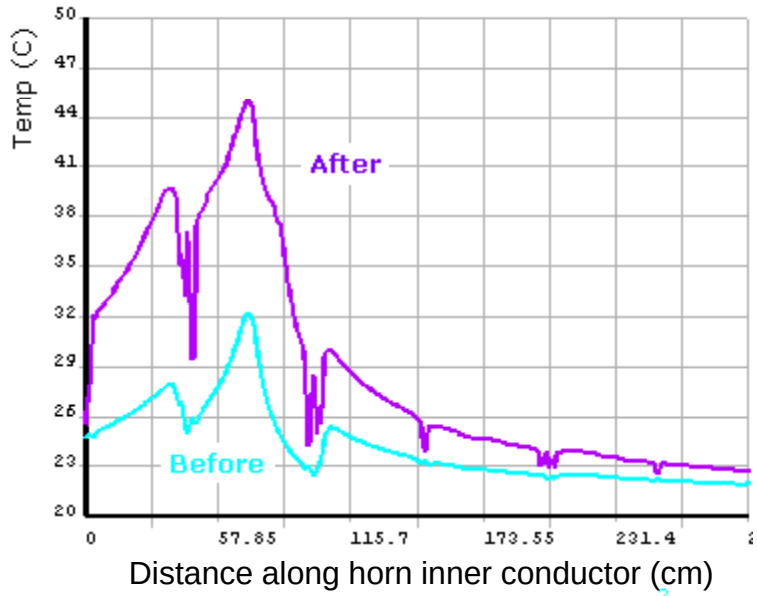

Thermal stress calculated for horn conductor:

A) Before and after horn/beam pulse

B) Before and after bell section warms up

Highest stress: 2491 N/cm2
compared to limit of 9655 N/cm2 for
Al 6061-T6 (including fatigue factor)

Zhijing Tang Nov. 7, 2006

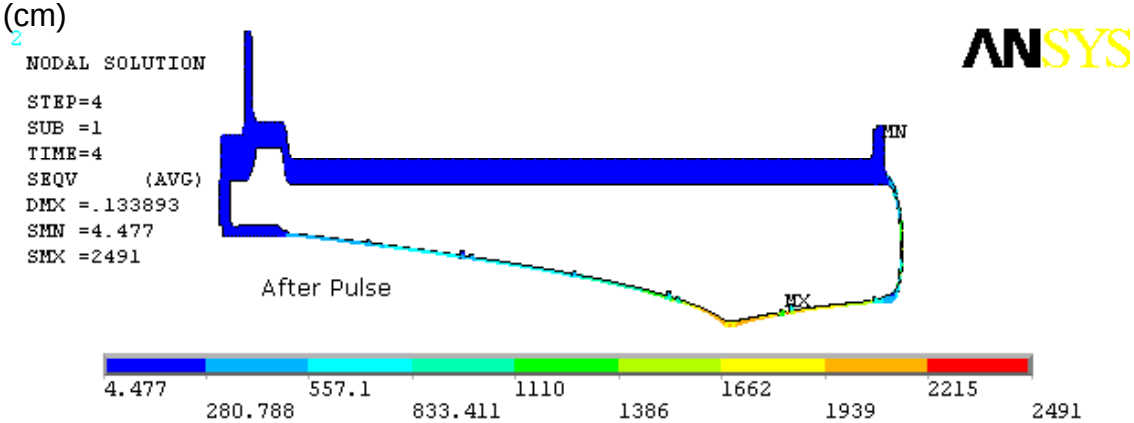

Inner conductor OK for heating and stress !

Horn outer conductor

NuMI prototype test of outer conductor water spray cooling

Plan to reduce thickness of outer conductor from 1” (400kW beam) to 5/8” (700kW beam)

- Beam heating load then remains about the same in the two cases (~13kW)

- Alignment is also preserved
  Water rolls down inside surface of horn, rising several deg C from top to bottom
  Excessive temperature rise would cause horn to “potato-chip”, affecting alignment

Horn 1 energy deposition

Energy Deposition in NuMI Horns: Thin Outer Conductor Byron Lundberg

Horn	Power (kW)	
	1" OC	5/8" OC
1	27.4	14.5
2	7.1	4.7

Table 1. Power absorbed in the outer conductor of the horns.

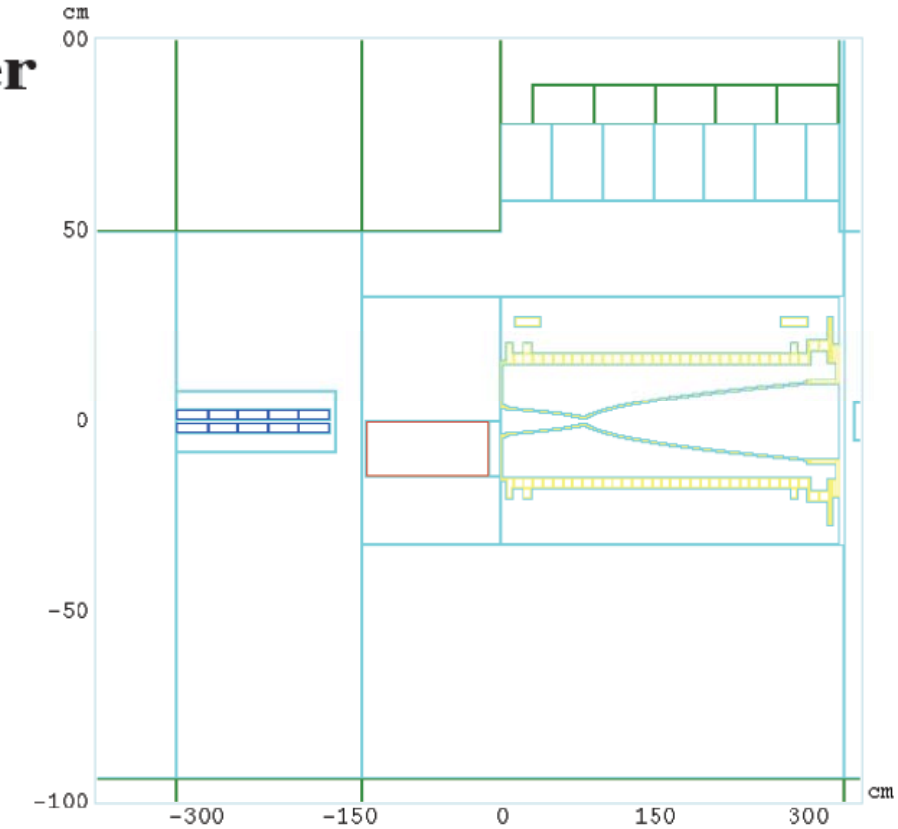

Existing Work Cell

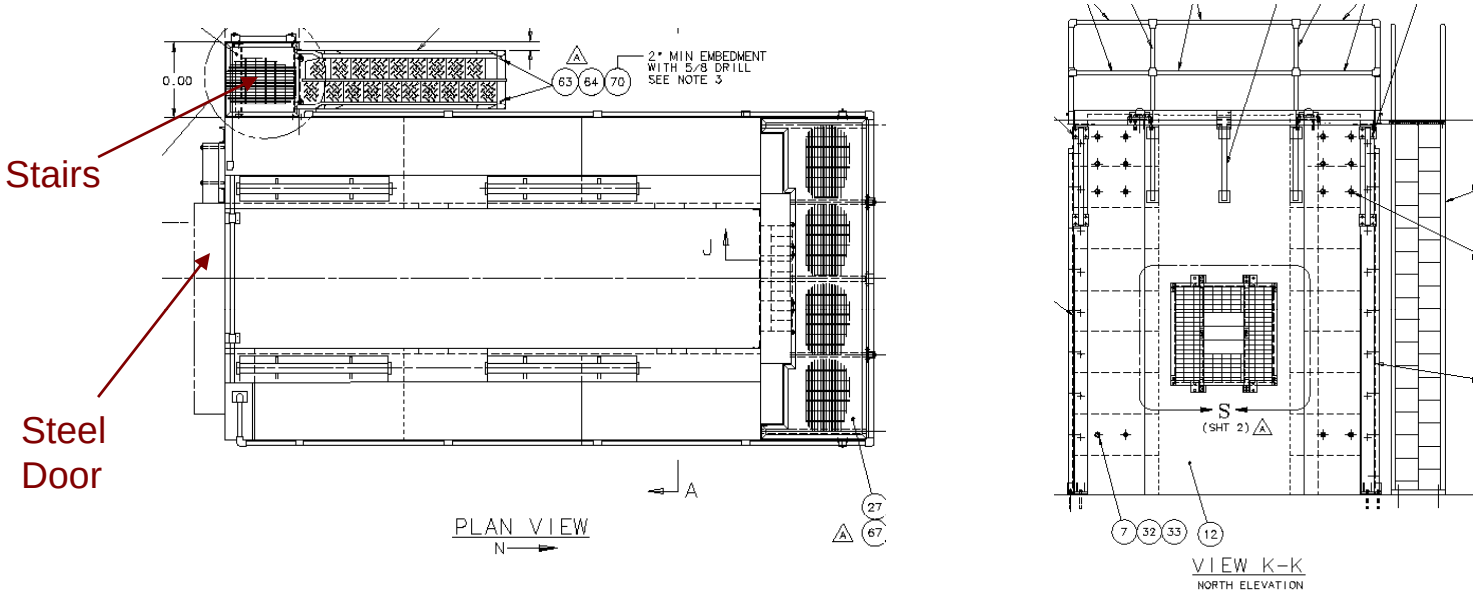

- Designed for component replacement, not repair
- 3 ft concrete side walls
- Steel door and steel end wall
- Supports weight of module and component
- Equipped with Lift Table to unmount/mount components
- Pb glass windows in beam right side wall and end wall

NuMI work cell for radio-activated components

Shown during test-assembly above ground

Lead-glass windows (not shown)

Remote controlled door

Remotely installable top shielding

Shielding for Horn 1 repair job

Built an extension of the work-cell with window for work

(Horn is in work-cell, behind the door)

Mock-up and practice for repair

Plan, time, and practice,
practice, practice repair

Needed to undo two
Swagelok fittings,
remove old section,
insert new section,
and tighten two fittings.

Time est: 2 min. of
actual work in slot

Dose for this "2 min." job
was 371 mr, (3.7 mSv)
divided over ~10 people.

The rest of job is in much
lower radiation field,
but dose can be non-negligible
due to time involved.

Motivation

- Original NuMI Target Hall Work Cell Design and Radioactive Component Removal Plan were based on 2 key concepts:
  - Work Cell for component change-out only (no repairs)
  - Long term storage of radioactive components in Target Hall shielded pit ("Morgue") (no removal of components up-shaft)
- Recent operational experience has altered those fundamental concepts:
  - Work Cell is needed for component repair
  - Radioactive component removal up-shaft for long term storage is required.
- The Work Cell must be upgraded and a Radioactive Component Removal Plan must be developed

Conclusions

- NuMI Upgrades and Operations
  - Organization exists in AD/External Beamlines
  - Similar to NOνA management structure
  - Estimates of Schedule, Manpower, Resources
  - Work is coordinated with NuMI Upgrades
- Horns for use with NOνA
  - Fits into existing spares production schedule
  - Only minor modifications to Horn outer conductor
- Work Cell and Radioactive Component Removal
  - Operational experience has led to change in philosophy
  - Upgrades to Work Cell are planned (more shielding, telemanipulators)
  - Component Removal and storage is planned

Target Hall Layout

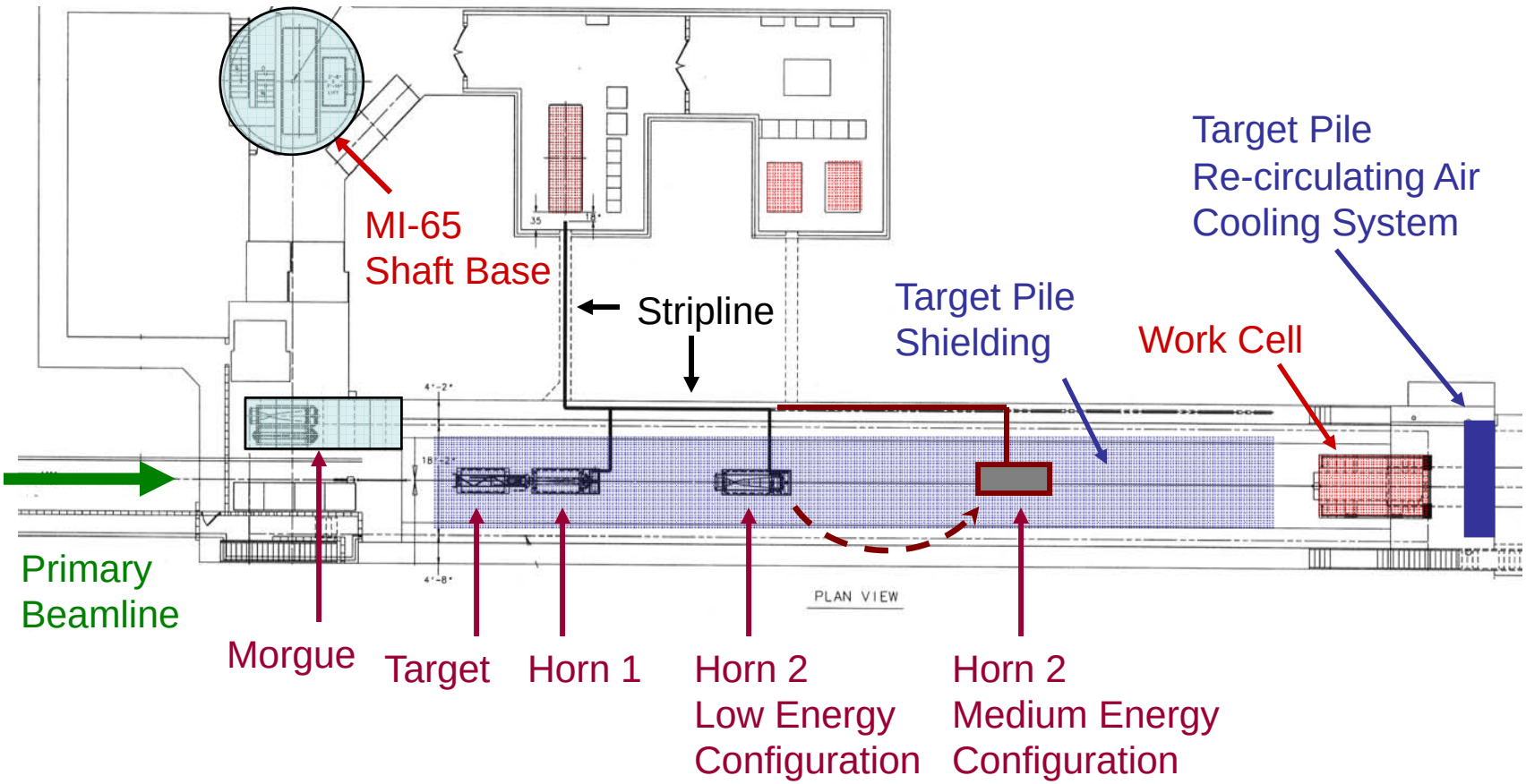

Target for Low Energy Configuration

Graphite Fin Core

Water cooling tube

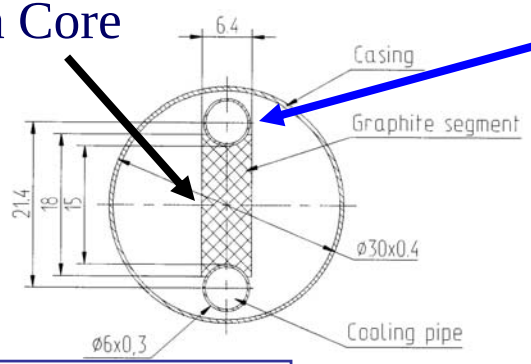

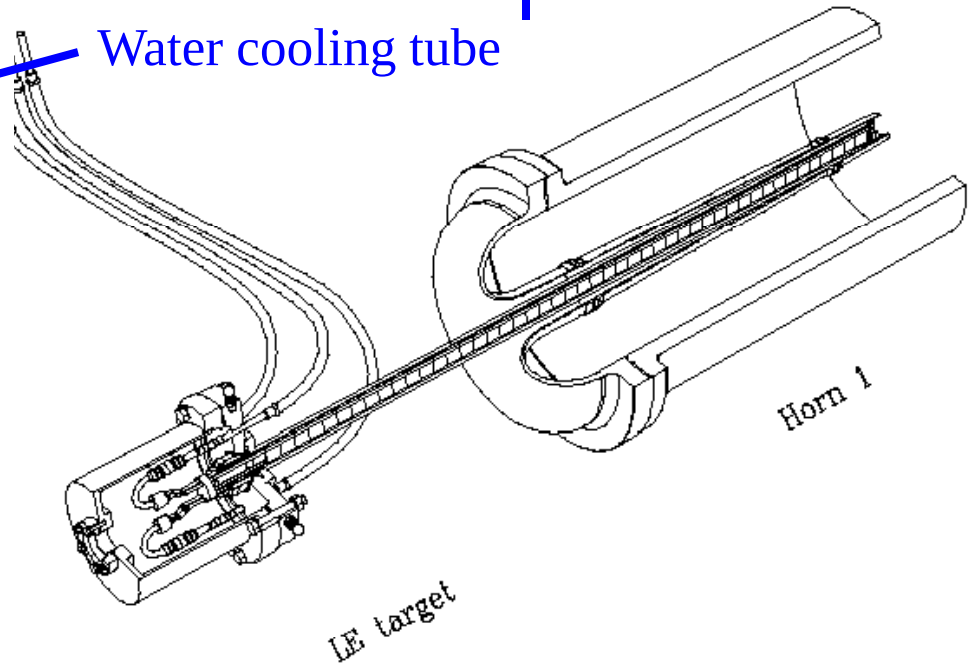

In use now.

Fits within the horn.

Capable of 400 kW

May be OK at ~480 kW

Target for Medium Energy Configuration

IHEP Design

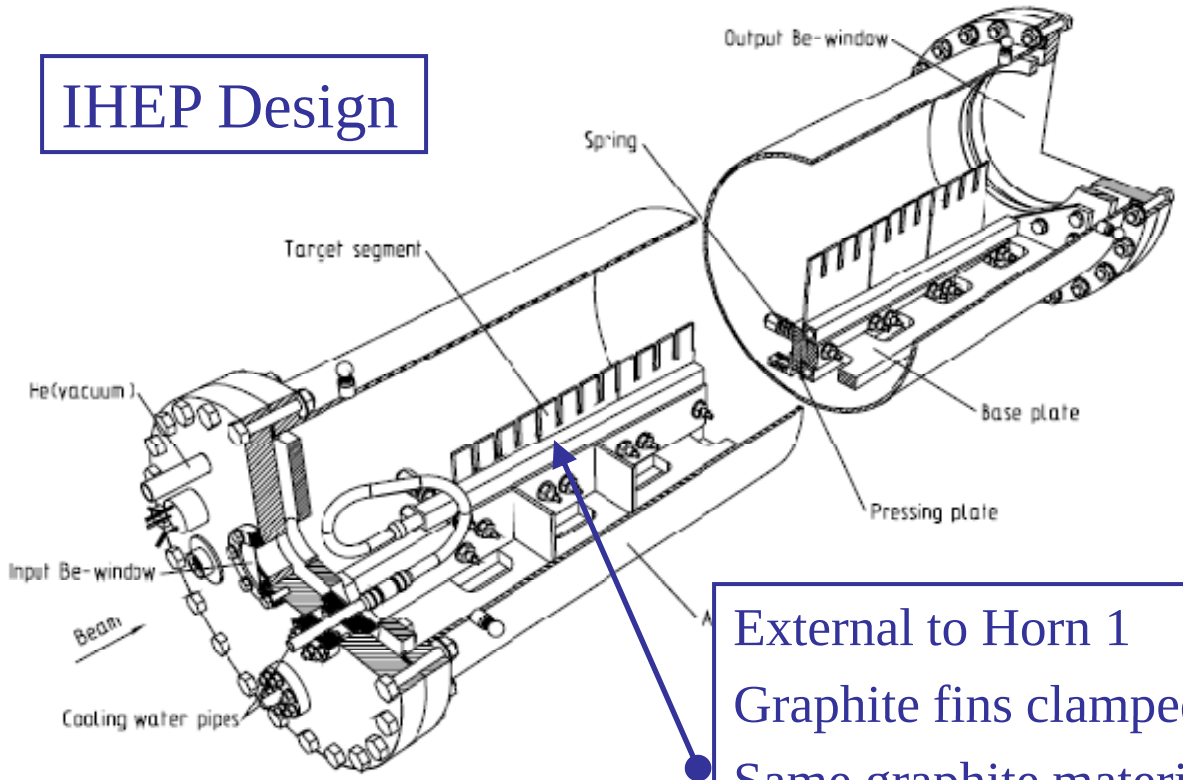

External to Horn 1

Graphite fins clamped with cooling plates

Same graphite material as the LE target

Capable of 700 kW operations