# Near Detector Scintillator Filling Equipment
# WBS 2.8.3

**Jim Musser**

**Indiana University**

CD-2 Director's Review of NOνA

# Near Detector Filling Requirements/Overview

- Total Scintillator volume: 29.6e3 gal (~ 5 supply tankers)
- Scintillator filling will take place from supply tankers on the surface, with a SS supply line running down the MINOS access shaft to the ND site.
- Filling will commence after the assembly of the ND is complete and the liquid scintillator containment system is in place.
- The IPND detector will be drained on the surface into storage tankers prior to transfer to the underground hall. Surface storage capacity required: ~ 20,000 gal.

# Near Detector Filling Requirements/Overview (2)

- Nominal Fill rate/module: 3 gal/min.  (same as FD)
- Same fill machine design used in FD, but with six nozzles.  (2 planes filled in parallel)
- Fill time/module:  16 min – horizontal  25 min – vertical
- Prep time:  15 min/set
- Total duration of initial filling operation:  60 hours
- Initial filling will be partial, leaving ~ 10 gal for top-up.  Following the initial filling, a top-up fill is performed, as in the FD.  Estimated time: 25 hours
- Flow rates will be monitored at the tanker and fill machine.  Detection of greater flow rate at the tanker than fill machine results in termination of flow.
- Personnel:  Two technicians

# WBS 2.8.3 Hall Plumbing

- SS lines from surface to ND site through access shaft.
- HDPE vapor return lines.
- 50 gal. charge relaxation tank provides ~ 1 min. hold time at nominal flow rate.
- SS lines rated for 150 psig.

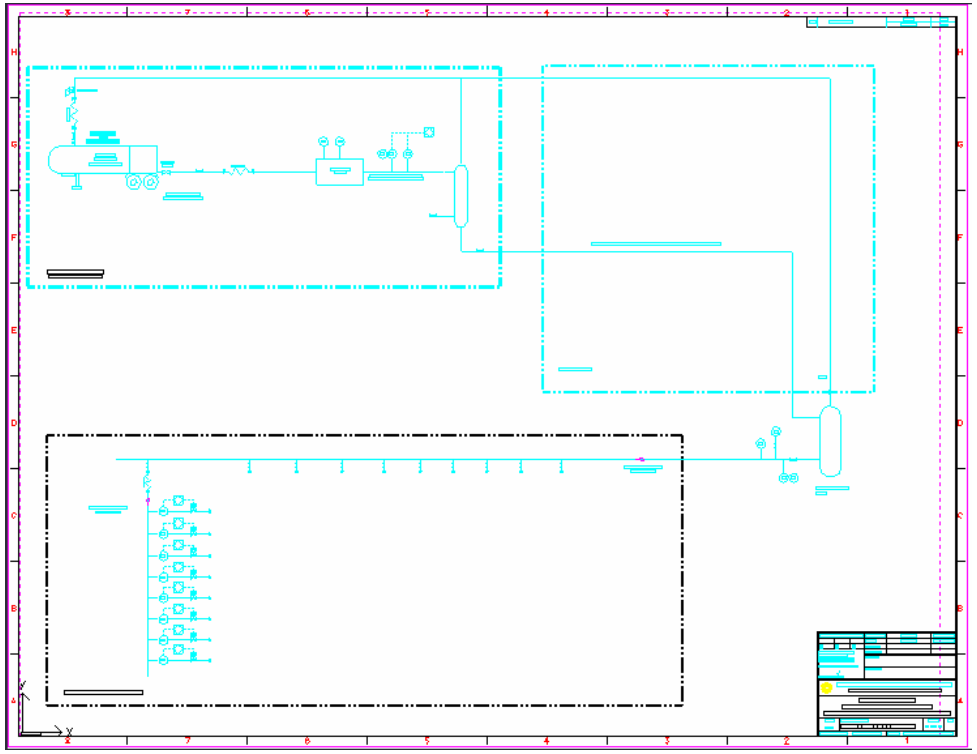

# WBS 2.8.3 Fill Machine

- Fill station mounted on a hand truck for easy portability.
- Fill station contains independent flow monitoring and control for 6 fill lines. (figure at right shows FD configuration of 8 fill lines)
- Positive displacement flowmeters and flow totalizers control shut-off valve during initial fill.
- Each fill line terminates in a fill nozzle that is designed with interlocks that prohibit flow unless the nozzle is properly attached to the module.
- During filling, a spill pan is placed in position surrounding the fill port. An optical sensor at the bottom of the spill pan detects the presence of standing oil, terminating flow in this case.

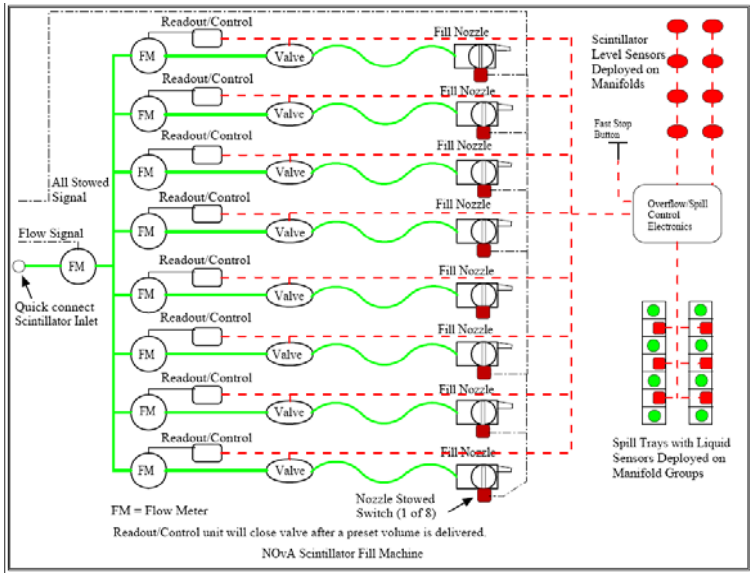


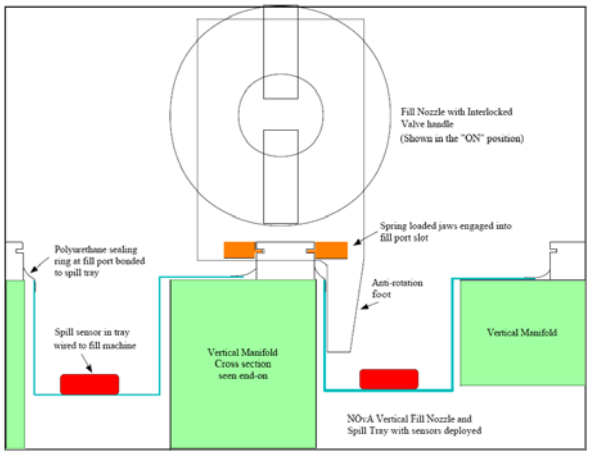

# ND Filling ES&H

- Liquid Scintillator is a non-conducting Class IIIB combustible material, with a flammability rating of 1, and flash point of $98^0$C.
- To avoid risks from static accumulation and discharge, all plumbing is conductive, grounded, and bonded. An anti-static additive has been added to the scintillator (Stadis 425) in concentrations that increase conductivity to 50 pS/m. This reduces the steady state electric current flow in the main distribution lines by a factor of ~ 100, reducing the charge delivered to the module by this factor.
- A 50 gal. relaxation tank is included in the distribution line at the base of the access shaft to further reduce static charge delivered to the module.
- Use appropriate interlocks and controls to terminate liquid transfer if spills are detected.
- Scintillator vapor is recovered to protect personnel and the environment through vent lines returned to the delivery tanker.
- 100 % spill containment is provided by a berm around ND and relaxation tank. (Covered in 2.8.1) All fill system plumbing will be designed in accordance with FESHM 5031.1 During filling, no personnel will be allowed in the access shaft.

# Schedule

- ND Filling will begin ~ May 2011.
- Final design review for filling hardware and procedures will take place prior to installation of fixed plumbing elements in 2010.
- Design of the scintillator filling hardware is advanced given these dates.