Horn 1 Alignment Offsets

June 5, 2007

Salman Tariq, FNAL
ANU Target Hall Infrastructure
CD-2/3a Director's Review Breakout

Overview

- NOvA Horn 1 Alignment Tolerance Specification: 1.50mm
- Horn Support System
- Target Chase & Module End Block Thermal Results (700kW)
- Horn 1 Horizontal Motion due to Beam Heating
- Horn 1 Vertical Motion due to Beam Heating
- Conclusion

Horn Support System

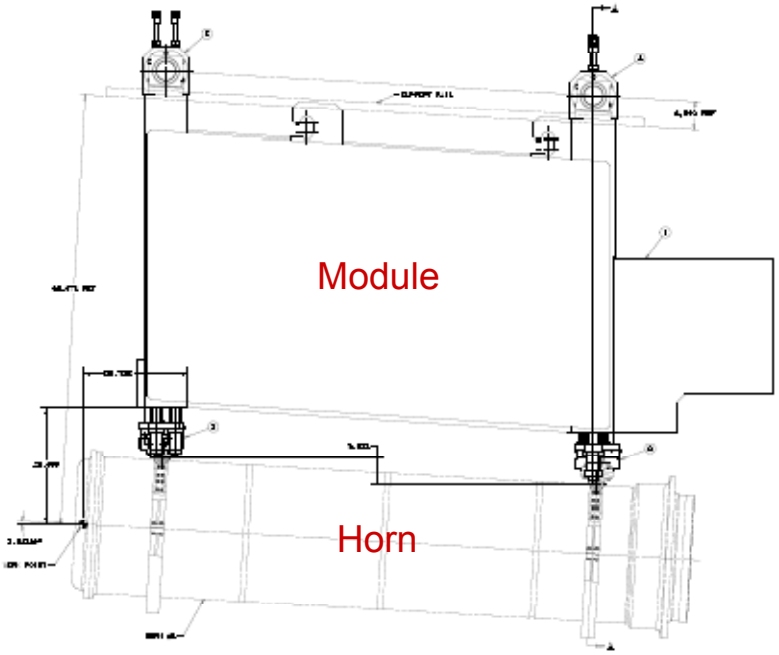

Horn Support System
(Existing Design)

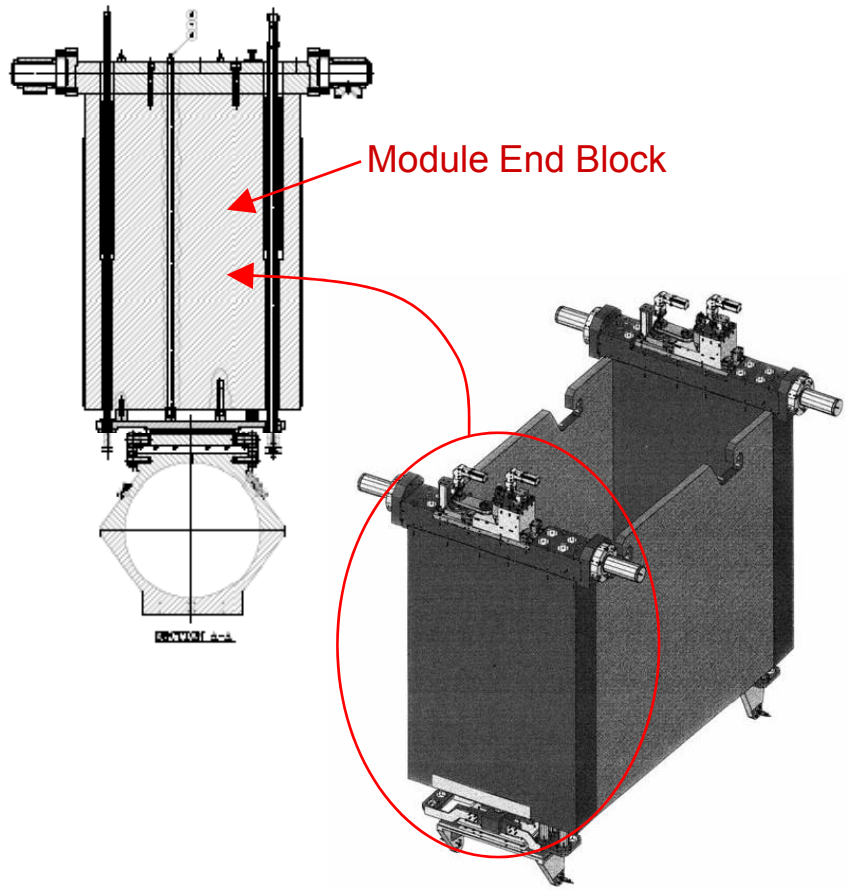

Typ. Module Isometric View
(this view is actually of the Target Module)

Horn 1 Module End Block

Downstream End View- Beam direction is out of the page

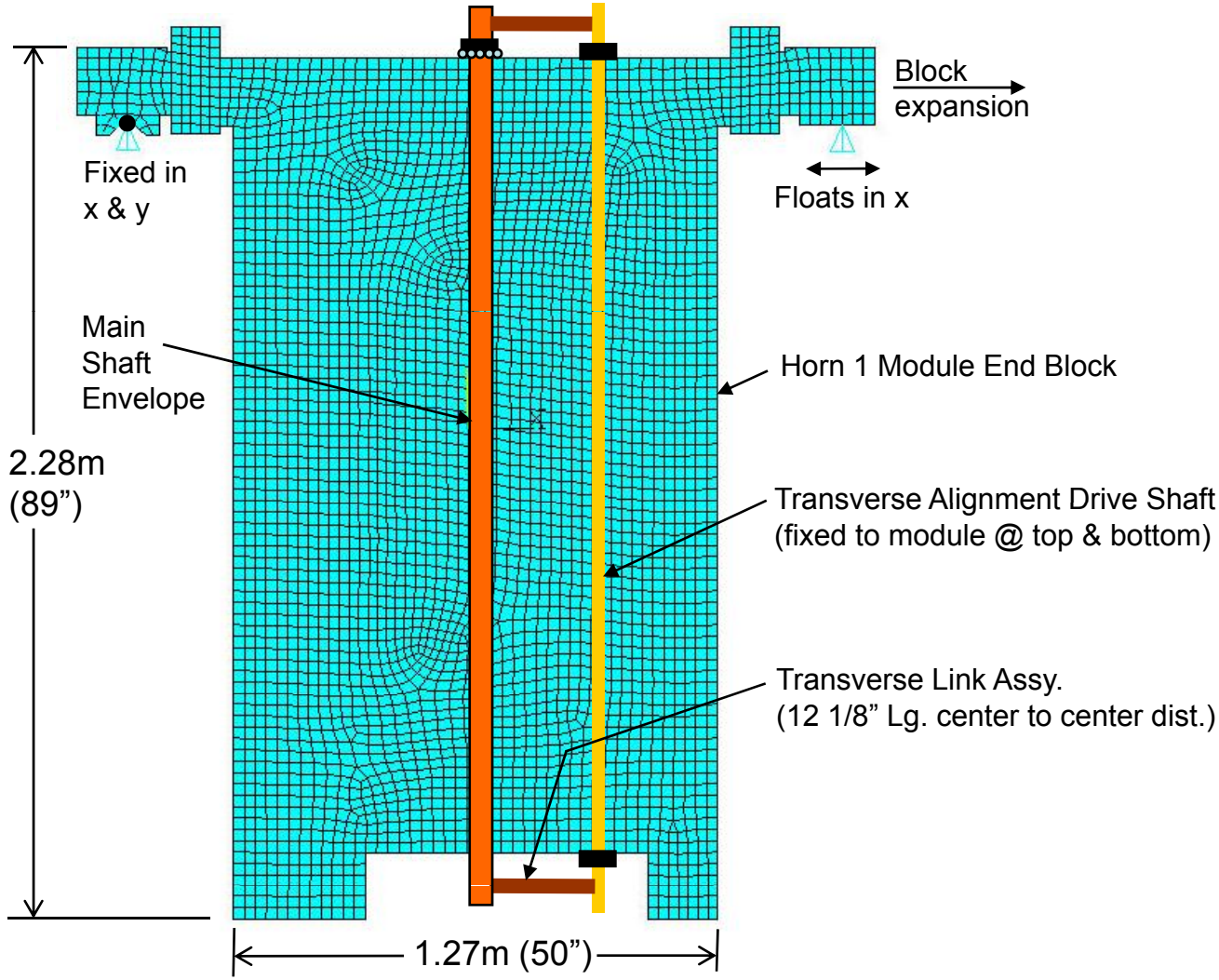

Target Chase & Module End Block Thermal Results (700kW)

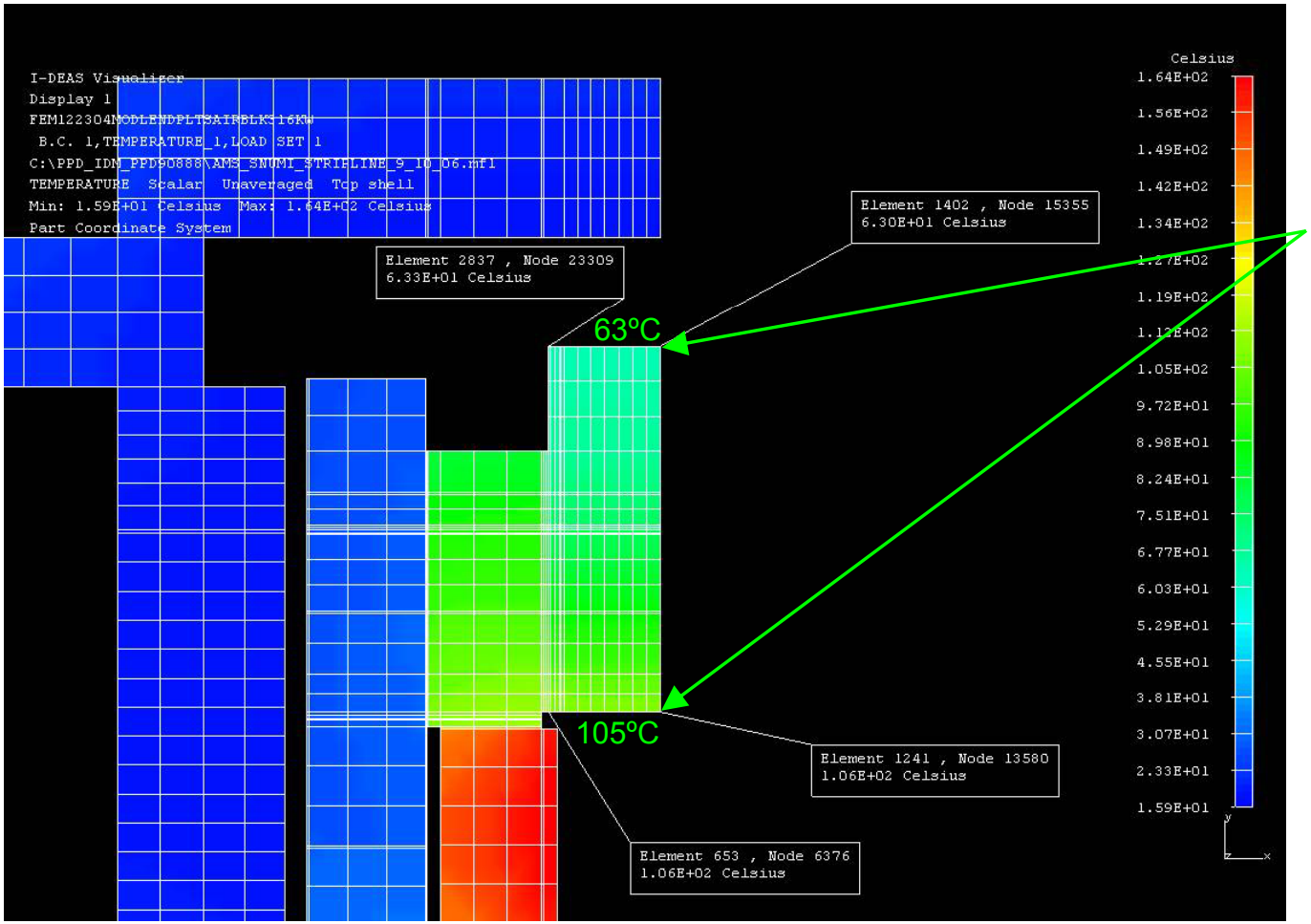

2-d Target Chase FEA Model, ½ Symmetry (Andy Stefanik, PPD/MD)

Module End Block temperature varies from 63˚C on top to 105˚C at bottom

Note: revised estimates of the FEA show lower temps, 46˚C at top & 88˚C at bottom. We took a conservative approach in this analysis by using the higher values and are still within NOvA's specified tolerance

Module End Block Thermal Expansion from Beam Heating

THERMAL PROFILE

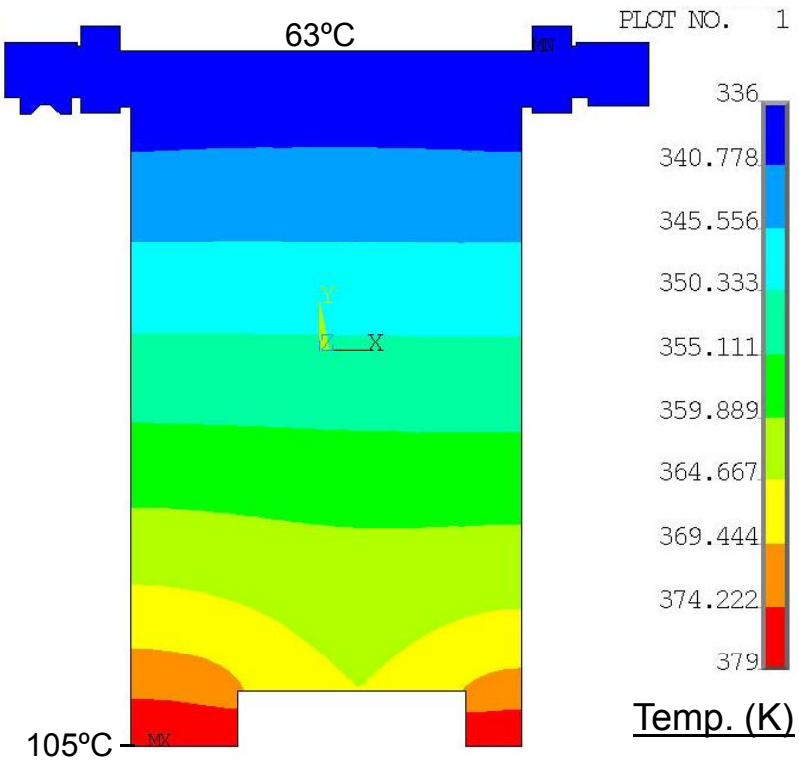

Note: Beam direction is out of the page

TRANSVERSE DISPLACEMENTS

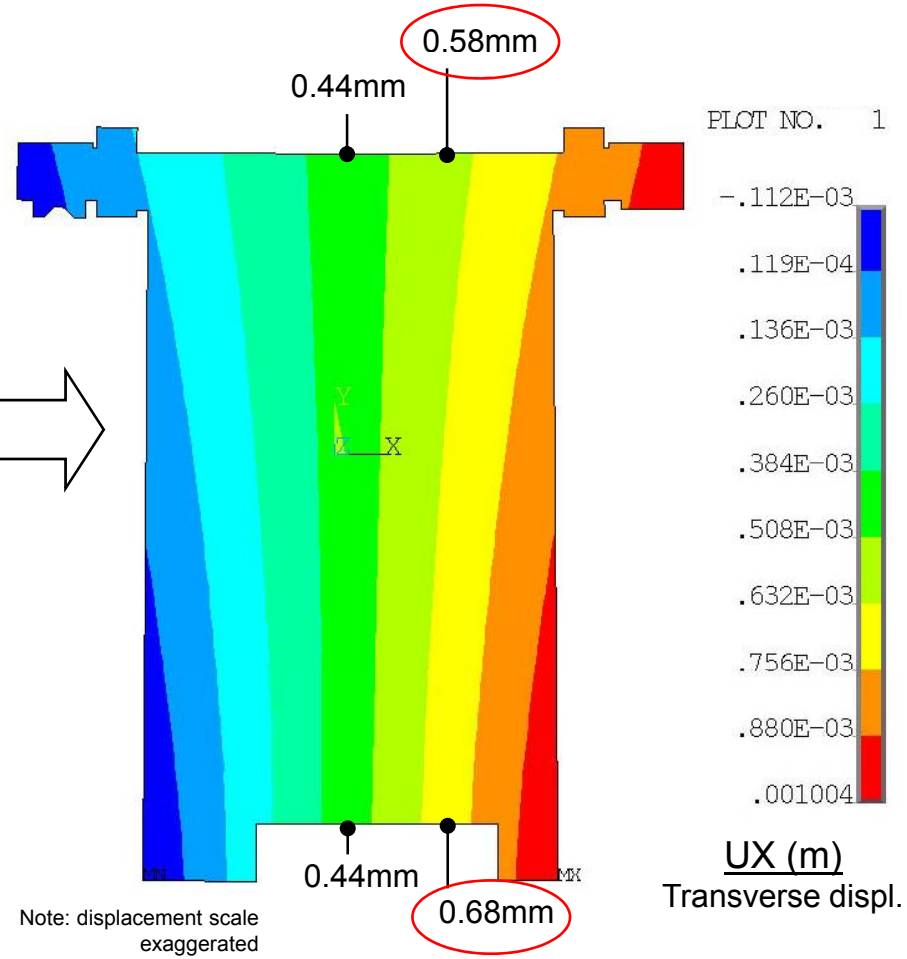

Note: displacement scale exaggerated

Resultant Horn 1 Horizontal Motion

MODULE TOP	Module End Block Top UX (mm)	Link Assy. (Top) UX (mm)	Net Main Shaft Motion @ Top UX (mm)
NOvA (700kW)	0.58	-0.142	0.438
NuMI (400kW)	0.37	-0.081	0.289

MODULE BOTTOM	Module End Block (Bottom) UX (mm)	Link Assy. (Bottom) UX (mm)	Net Main Shaft Motion @ Bottom UX (mm)
NOvA (700kW)	0.68	-0.283	0.397
NuMI (400kW)	0.44	-0.195	0.245

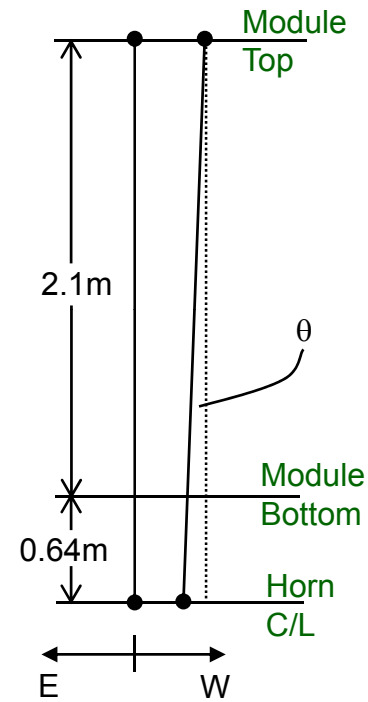

NOvA (700kW)

Main Shaft tilt angle:

$\sin\theta = (0.438-0.397)/2100 = 1.952e-05$

$\theta = 1.12e-03^{o}$

Resultant Horn 1 Horizontal Offset:

$\delta_{700} = 0.438 - (2100+640)\sin\theta =$ **0.384mm (West)**

In comparison,
NuMI (400kW)
δ_{400} = **0.232 mm (West)**

Horn 1 Shaft Envelope

Mechanical Spring System & FEA Model

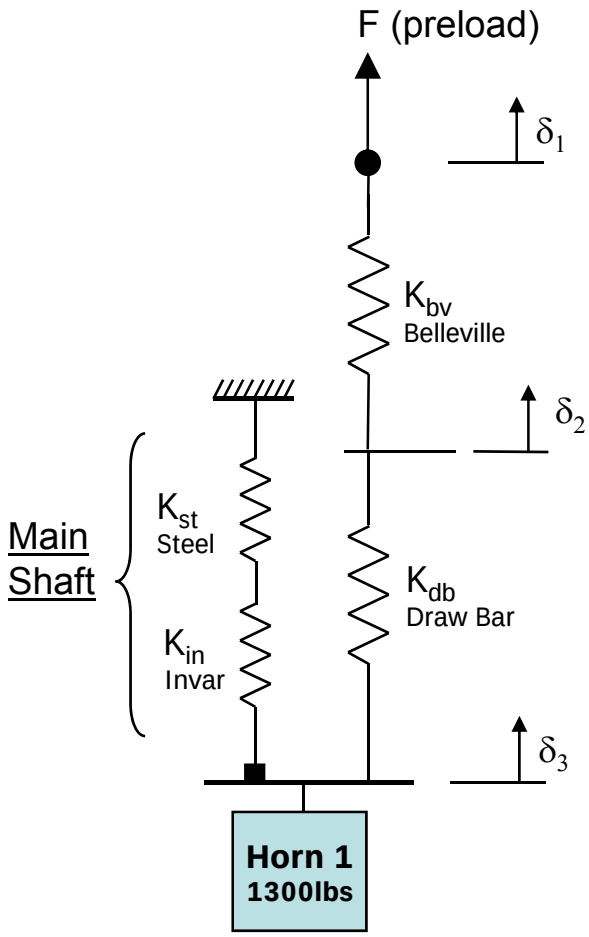

Simple Spring System

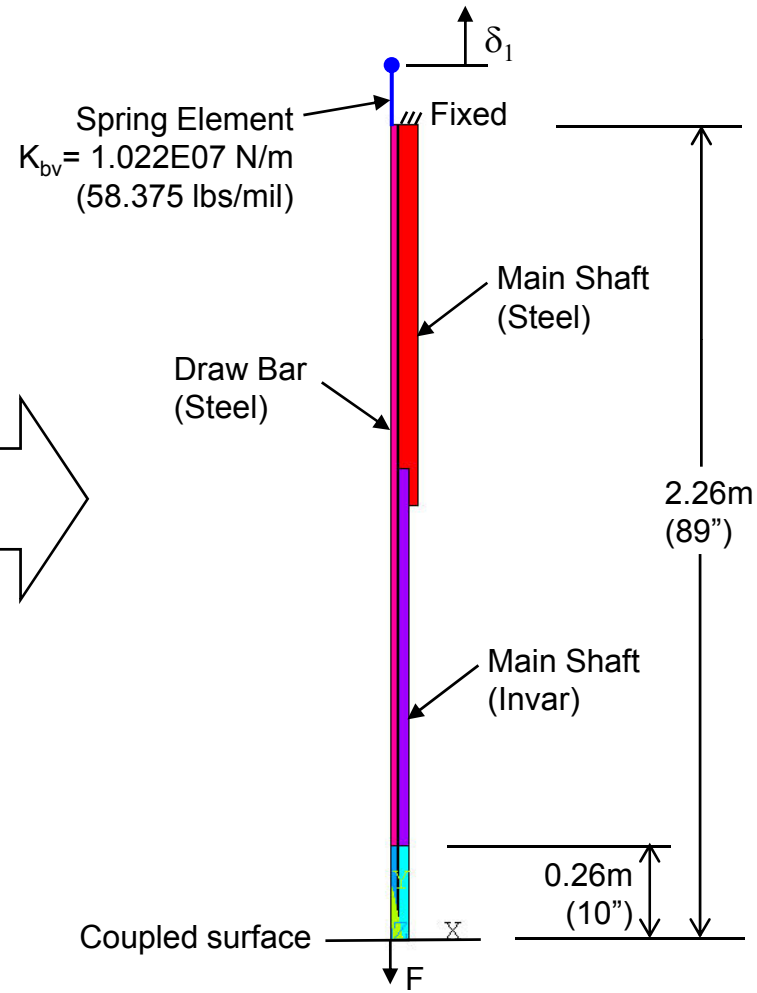

FEA Structural Model
2-d Axisymmetric

Shaft Envelope Expansion & Resultant Horn 1 Vertical Motion

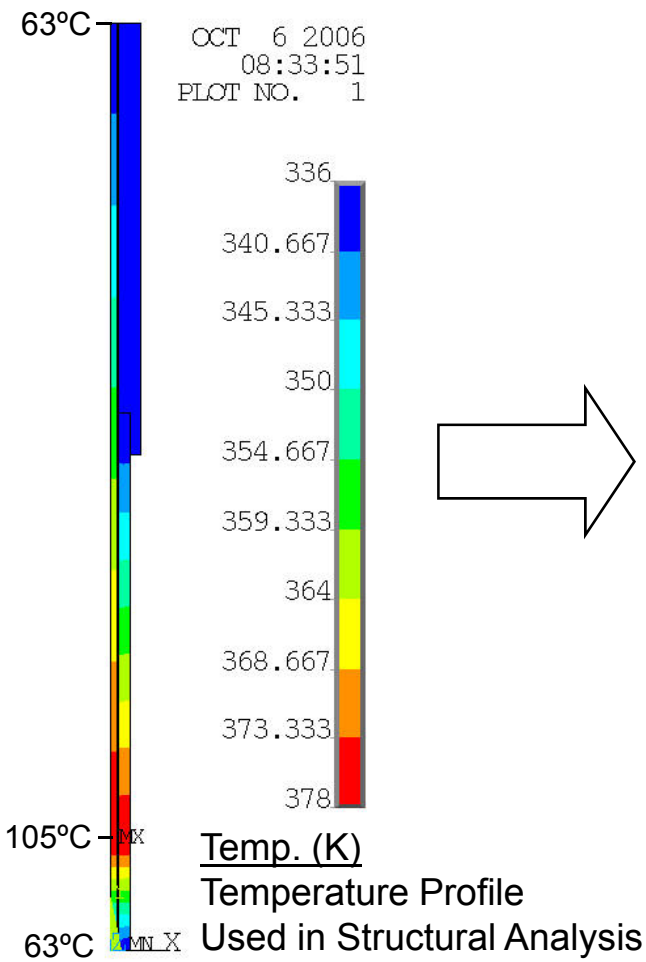

Temp. (K)
Temperature Profile
Used in Structural Analysis

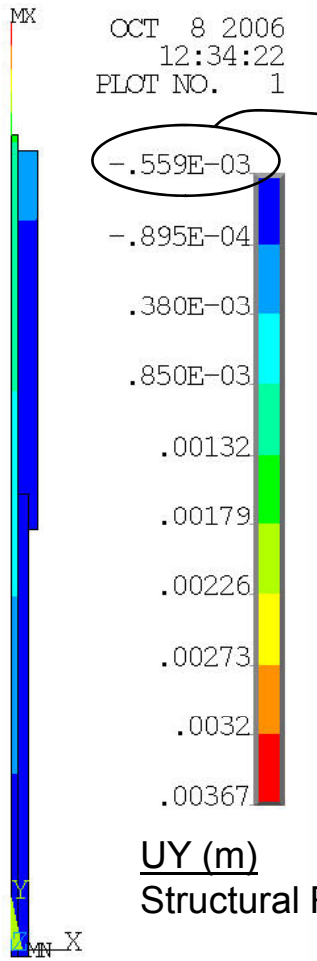

UY (m)
Structural Results

Note: displacement scale exaggerated

- Horn 1 vertical displacement due to shaft expansion: -0.56mm
  Horn 1 Clamp Expansion: -0.20mm (est. from B. Wands clamp FEA)
  Resultant Horn 1
  Vertical Offset = -**0.76mm(downward)**

- Existing belleville washer setup should be sufficient for NOvA 700kW beam operation (4,068 lbs resultant preload after thermal expansion)

Conclusion

- The calculated Horn 1 alignment offsets are as follows for 700kW beam:

  Horizontal: ~0.40mm (west–beam left)
  Vertical: ~0.80mm (down)

- These values are within the 1.50mm alignment tolerance specified by NOνA for the Medium Energy Configuration