Module Production Factories

WBS 2.5.3

June 6, 2007

Ron Poling

Tom Chase, Dan Cronin-Hennessy, Ken Heller,
Nathaniel Pearson, Alex Smith, Matt Strait, et al.

Details in Section 13.4
of the NOνA TDR

Overview of Module Production

- Deliverables: 14,136 (FD) + 496 (ND) installation-ready NOνA modules assembled from manufactured components. Requires extensive coordination with other WBS's for R&D, QA techniques, storage/ inventory/delivery logistics, etc.
- Factory #1 (Fermilab)
  - Manufacture 32-cell extrusion assemblies from 16-cell extrusions:
    - Receive, sort, store raw 16-cell extrusions.
    - Perform inspections and necessary testing to verify conformance with specs.
    - Trim extrusions to length, prepare gluing surfaces.
    - Ship to module assembly factory as needed (30 per truckload).
- Factory #2 (U. of Minnesota)
  - Assemble/test modules from extrusions and other components:
    - Receive extrusion assemblies.
    - String fibers through cells and thread through snout and optical adapter.
    - Seal modules with buffer and structural adhesives.
    - Finish optical adapter, test for fiber damage and leak-tight seal.
    - Pack/ship to detector site (24 per truckload).

Extrusion Assembly Factory

- Factory Space
  - Wideband Lab Bldg
    - 8400 sq. ft.
    - Two 15-ton cranes
    - Modifications planned to accommodate extrusion/ module loads
    - Logistics are challenging: two shifts or a larger, more flexible space required
- Storage Space
  - To be named
    - Planned capacity: 50 pallets of 30 extrusion assemblies (32-cell)
    - ~21,000 sq. ft.

Extrusion Assembly Factory

1. Unload pallet of thirty 16-cell extrusions (air-caster system).
2. Lower pallet to factory floor.
3. Float to inspection area.
4. Measure extrusion thickness and sort by thickness into stacks with floor crane.
5. Inspect/measure extrusions; reject bad ones and record data in DB.
6. Select pair of compatible 16-cell extrusions, transfer to rolling table with floor crane.
7. Roll to gluing area; transfer to gluing table; glue to make 32-cell extrusion (15-min. cure); cut to length; roughen.
8. Build stack of thirty 32-cell extrusions; pack for shipment.
9. Float to shipping area.
10. Raise to loading dock platform.
11. Load onto truck for shipment to Factory #2 or storage.

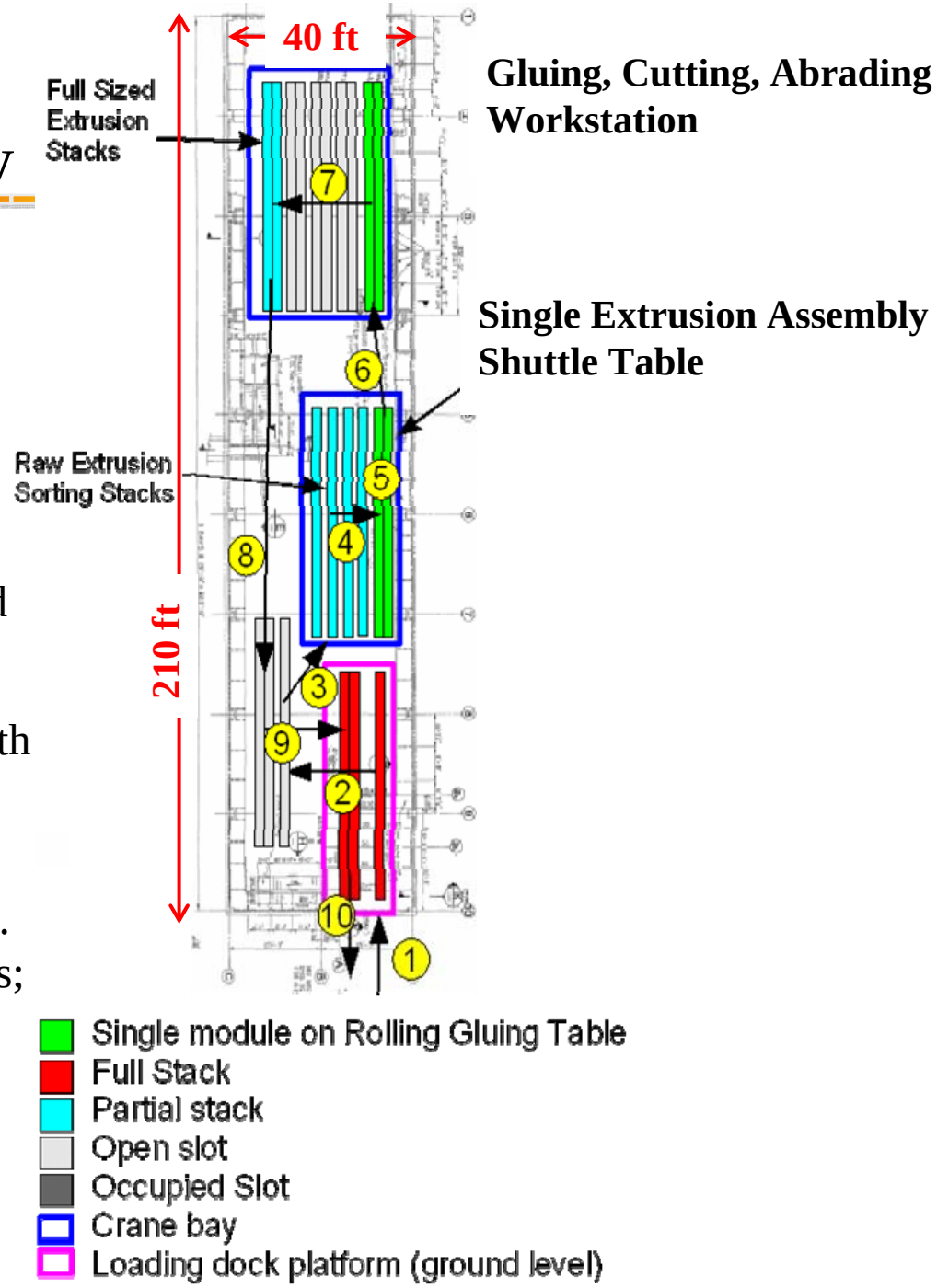

Extrusion Assembly Factory – Labor Estimates

	Task	Labor (Min/Mod.)	Basis
1.	Transfer raw 16-cell extrusions from storage to factory.	17.3	Estimate
2.	Lower extrusions to factory floor.	3.7	Estimate
3.	Float to inspection area.	4.2	Estimate
4.	Inspect/measure/sort extrusions.	30.4	Estimate
5.	Transfer matched pair to assembly area.	33.0	40% Measured
6.	Glue pair to make 32-cell extrusion ass'y.	8.5	Measured
7.	Cut to length, roughen, move to stack.	22.5	65% Measured
8.	Float to crane area.	4.8	Estimated
9.	Raise to loading dock platform.	3.7	Estimated
10.	Load for shipment to Factory #2 or storage.	5.9	Estimated
Tot.		134	~30% Measured

Module Assembly Factory

- Factory Space
  - "Existence Proof"
  - Currently available space in a public-transit-accessible industrial area near the Minnesota campus
  - ~60,000 sq. ft.
- Factory Planning
  - Choreography based on funding/ schedule and this example space
  - Full production: 30 modules/day
  - Student labor, full-time management staff, physicist oversight
  - Scalable with limitations

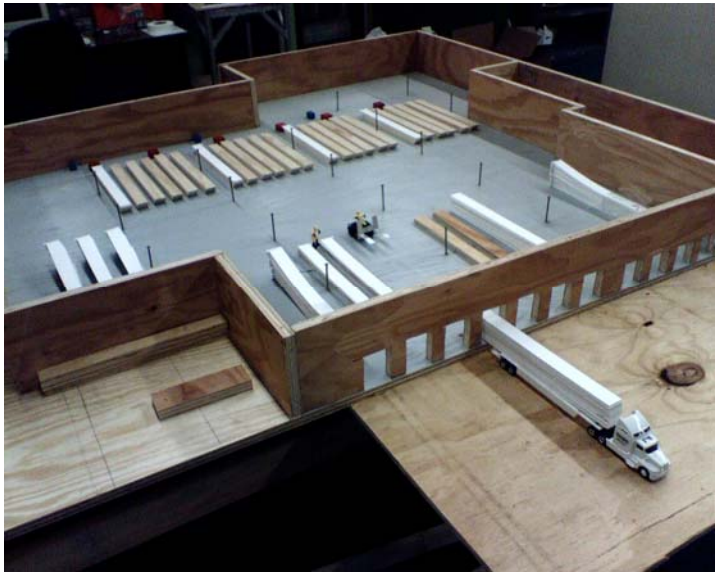

Module Assembly Factory – Schedule Drivers

- "Just in Time" scheduling
  - Production requirement: 30 modules per day
  - Extrusion assemblies received in shipments of 30, one per day
  - Completed modules sent to Ash River (or storage) in shipments of 24 – one per day, plus an extra every fourth day.
- Glue requirements:
  - "Buffer Glue"
    - 3M 2216 at all points of contact with scintillator
  - "Structural Glue"
    - Devcon Plastic Welder outside 2216 seal as load requires

NOνA Glue Name	Glue Function	Actual Glue Product	Fixture Time	Full Cure Time
Buffer Glue	Prevent contamination of scintillator by structural glue	3M 2216 Epoxy	8-12 hours @ 75 F	7 days at 75 F
Stuctural Glue	Provide primary strength to glue joint	Devcon PlasticWelder (acrylic)	10-15 min @ 72 F	24 hours @ 72 F

- QA on finished modules
  - Leak checking

Minnesota Factory - Assembly

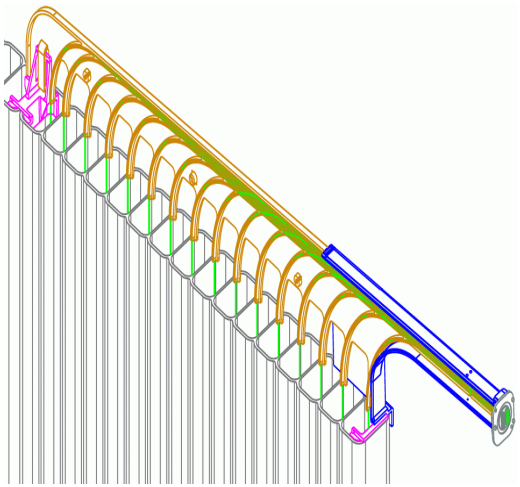

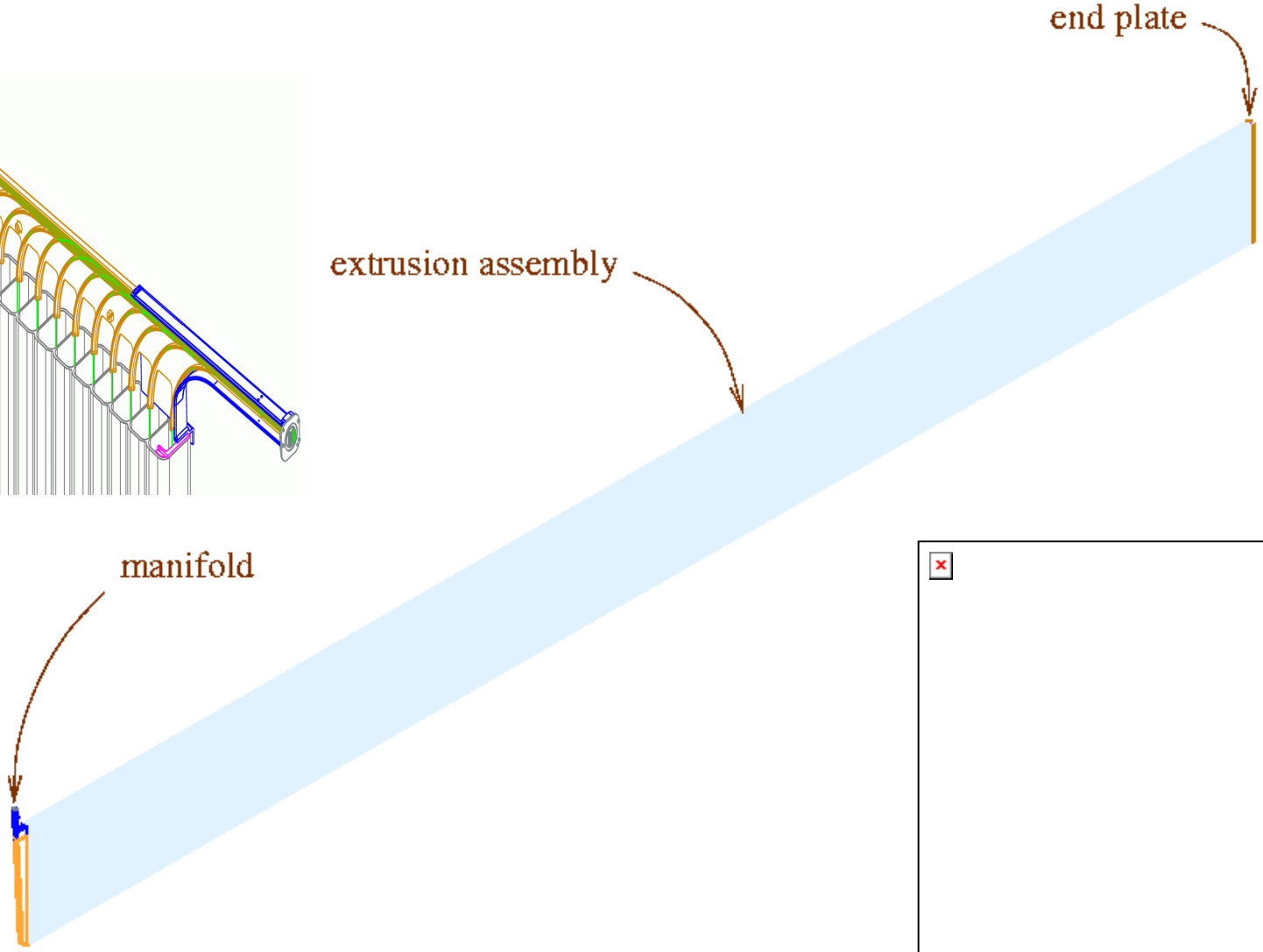

Manifold – fiber guide, liquid filling, expansion volume, photodetector interface

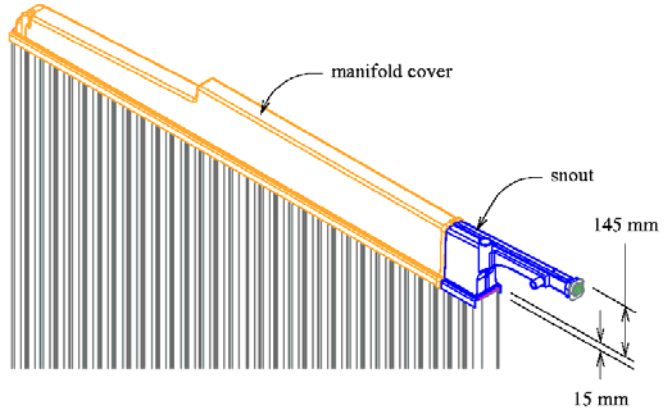

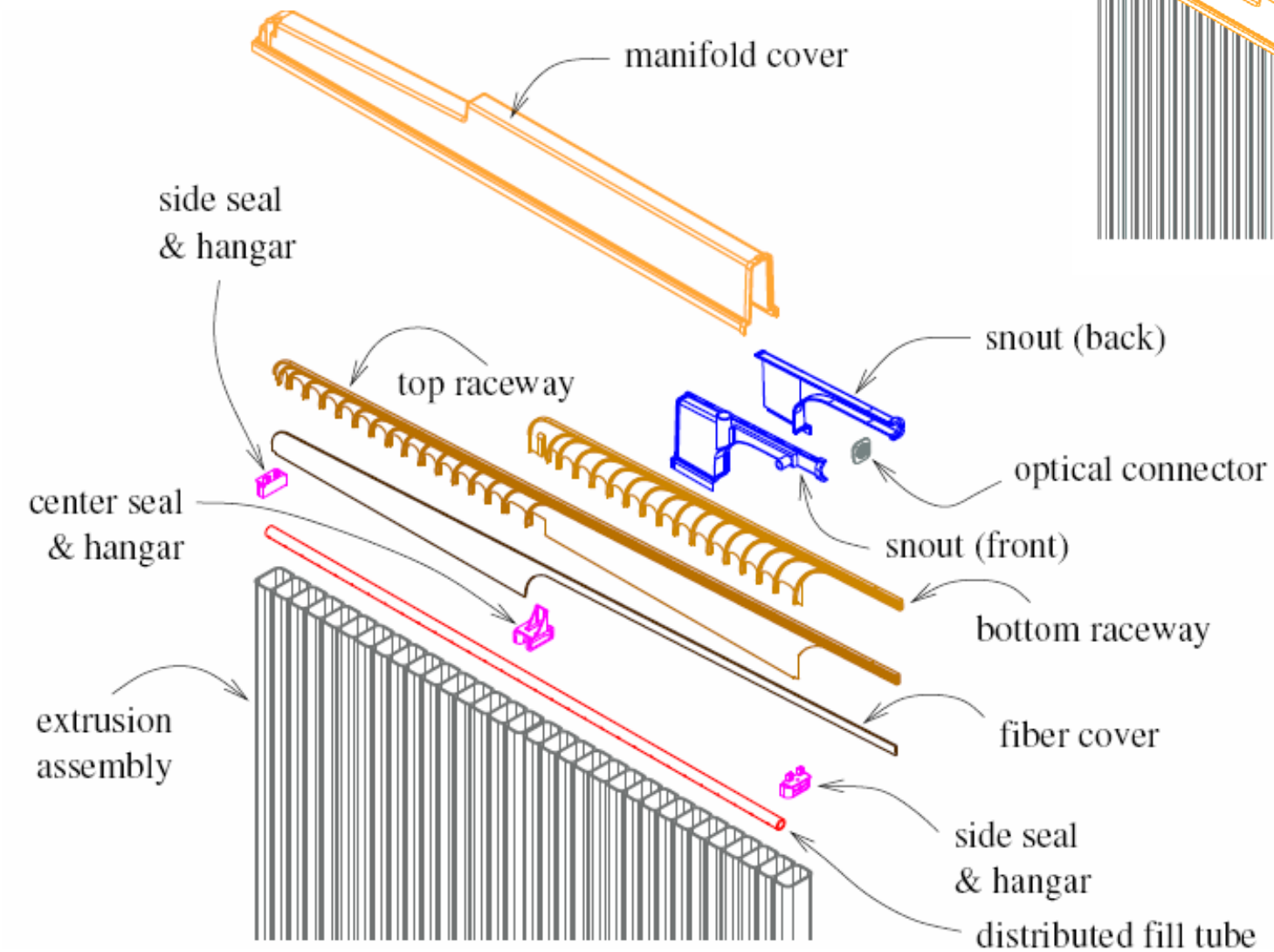

Production Details Day 1

(Preassembly: Glue optical adapter to snout lower half with 2216.)

1. Unload extrusions from truck.
2. Inspect for shipping damage.
3. Crane extrusions to gluing platform.
4. Glue side and center seals onto extrusion.
5. Fiber raceway ass'y near snout attached to center and side seals and manifold snout back half.
6. Glue manifold snout back half to extrusion with 3M 2216.
7. **Cure overnight.**

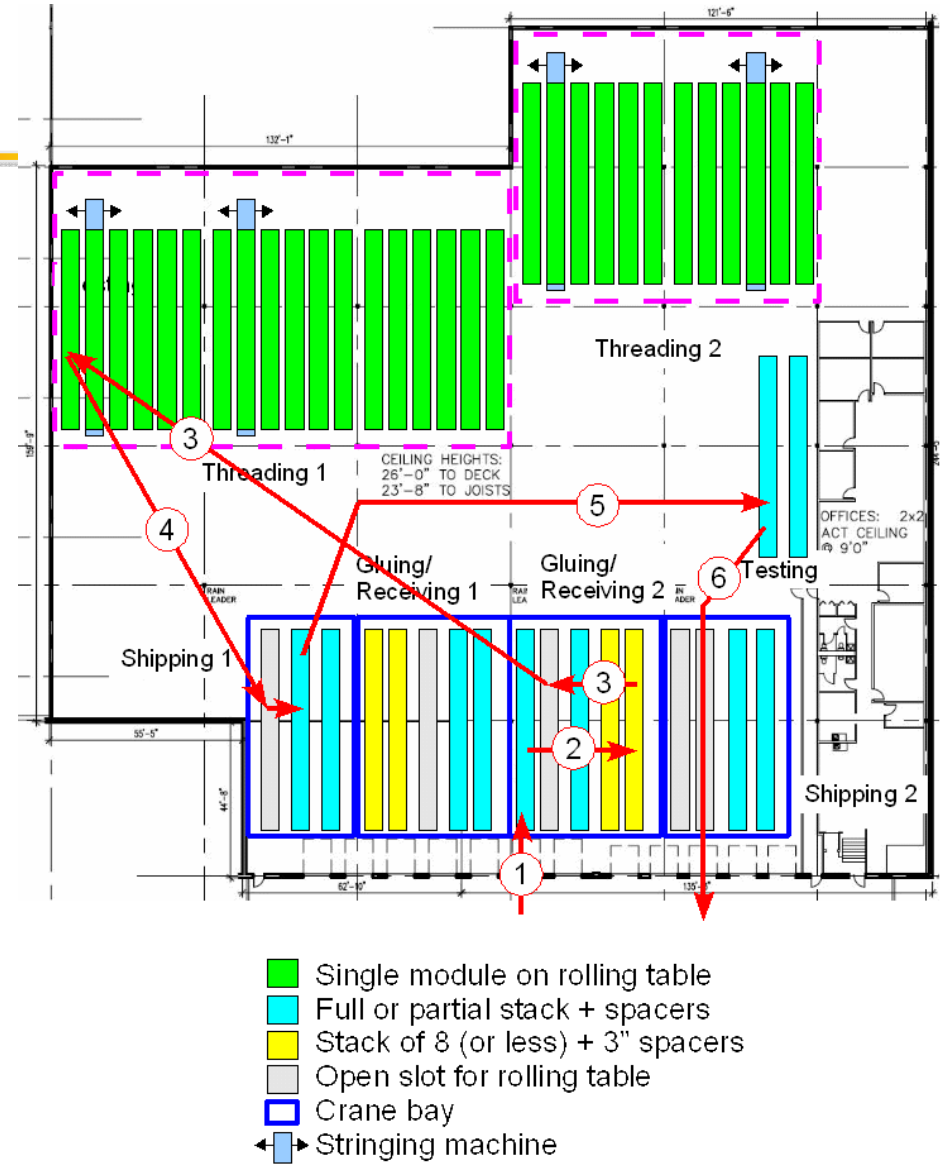

Example flow diagram: moves of modules within factory.

Production Details
Day 2

8. Crane extrusions to rolling tables, roll to work stations.

   Three stringing stations operate in parallel. Videos are available to illustrate stringing operation.
9. Place stringing machine at cell 1.
10. Place shield tray over raceway.
11. Attach vacuum fitting to far end.
12. String fibers through first 8 cells.
13. Thread fibers through raceway and snout as next 8 are strung.
14. Repeat 12&13 for 24 more fibers.
15. Remove vacuum fitting.
16. Remove parachutes.
17. Pot fibers in optical adapter (2216).
18. Glue end plate (2216 butt joint).
19. Seal fibers in snout (2216).
20. Glue snout upper half to extrusion (2216 butt joint).
21. Attach fill tube to fill port.
22. Glue manifold cover to extrusion (2216 butt joint).
23. Inject glue (2216) into manifold cover joints.
24. **Cure overnight.**

Production Details
Days 3 and 4

26. Reinforce end plate/side seal with fiberglass mesh and structural adhesive (PW).
27. Attach (PW) edge stiffeners to 2 outside vertical modules in a plane.
28. Inject structural adhesive (PW) btw manifold cover and extrusion.
29. Inject structural adhesive (PW) btw snout sides and extrusion.
30. Cure for **12 min**.
31. Face optical adapter.
32. Perform continuity test for fiber damage.
33. Roll module to crane bay.
34. Crane module to shipping stack (w. spacers).
35. Leak test modules.

    (Requires 12 hours.)

33. Read bar code, record module-specific info in DB.
34. Add protective material to stack for shipping.
35. Float to buffer storage area or load onto truck for shipment to Ash River for installation.

Module Assembly Factory – Labor Estimates

	Item	Labor (Min/Mod)	Basis
1	Manifold preassembly	3.0	Estimate
2	Unload extrusion assemblies	5.1	Estimate
3	Distribute to gluing platform	8.0	Estimate
4	Assemble side/center seals, lower raceway, snout lower half	19.0	Measured
5	Distribute to work tables	20.0	60% Measured
6	String fibers through cells	43.3	70% Measured
7	Thread fibers through raceway and manifold to optical connector	30.0	Measured
8	Glue end plate and manifold parts	31.0	80% Measured
9	Pot fibers in optical connector	4.0	Estimate
10	Add structural glue to strengthen joints, edge stiffeners	16.3	Measured
11	Face (fly-cut) optical connector	15.5	Measured
12	Test for fiber damage	5.7	Measured
13	Transfer to shipping stack	16.0	40% Measured
14	Move shipping stack to leak-testing area	4.5	Estimate
15	Leak test – includes setup on day 3, completion day 4	1.6	20% Measured
16	Package and load	8.4	Estimate
Total		231.4	70% Measured

Personnel Risks

- Injury in handling extrusions and modules with air casters, crane/vacuum lifters, specially-designed tables for assembly tasks and movement within factory/warehouse space
  - Shipping stack tipping risks mitigated by procedures designed for PVC extrusion handling (WBS 2.4.5). Gluing rack incorporates anti-tip guide.
  - Extensive training during production ramp-up
  - Training sessions required for all new student techs before they start work
  - Safety footwear required at all times, gloves as appropriate
- Factory machine hazards
  - Final designs will incorporate safety and ergonomic features, including guards for all rotating and cutting components
  - Safety glasses required at all times when using machines
- Material hazards, especially MMA adhesives
  - Consult with University/Fermilab safety personnel to design and implement adequate air circulation
  - Require safety glasses and gloves as appropriate

Schedule Risk: Production Bottlenecks

- "Just in time" model minimizes storage costs and local moves.
- Mitigate disruption risk with "storage buffers."
  - Raw extrusions: 50 pallets of 30 (20,000 ft^2) – 10-week supply.
  - Assembled modules: 25 pallets of 24 (10,000 ft^2) – 4-week supply.
- Option for production speed-up (7-day operation); factory model is scalable to higher capacity.

From John Cooper

Number of PALLETS (24 modules per pallet) **stored**

[50 pallets requires ~21,000 sq ft]

(25 pallets is ~ 1 month of production)

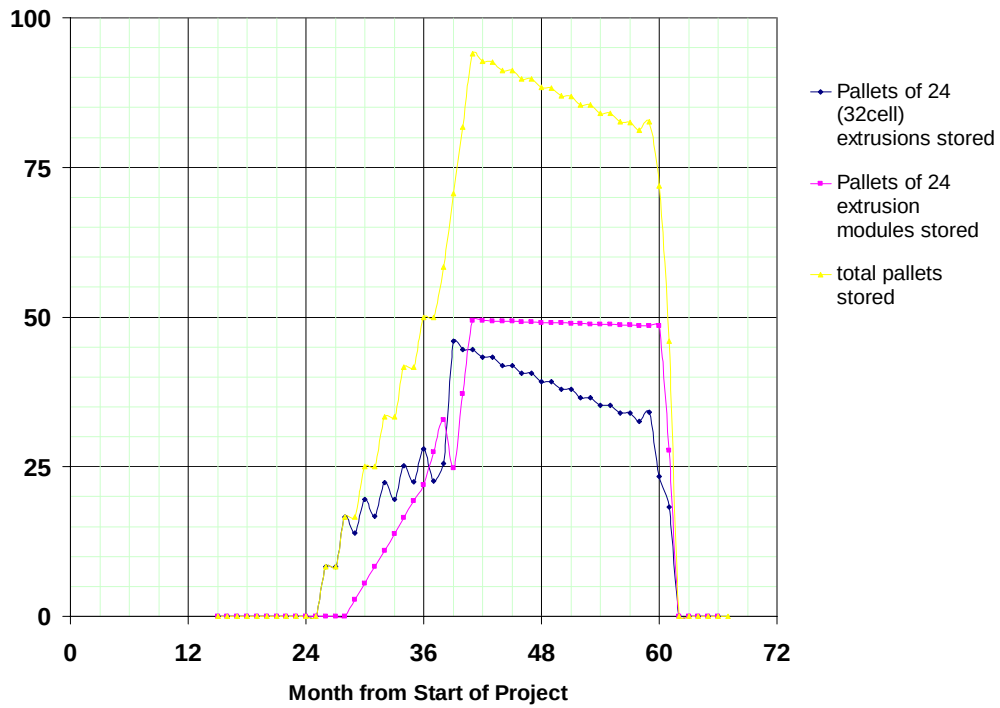

Schedule Risk: QA Failures

- QA testing at Factory #1 will intercept faulty extrusions before any assembly, allowing rapid feedback to extruder.
  - Faulty raw extrusions will be discarded. 10-week storage buffer of assembled extrusions should facilitate diagnosis and mitigation of extruder problems.
- QA testing at Factory #2 will intercept assembly failures (fiber damage during stringing, leaks) before shipping. QA at installation will intercept modules damaged in handling, storage and transit.
  - Faulty modules will be discarded. Based on initial experience we project that failures in and subsequent to assembly will be minimal. 4-week storage buffer of assembled modules should accommodate diagnosis of problems, adjustments to equipment/ materials, retraining, or other responses.

Summary and Additional Information

- Plans for extrusion-assembly and module-assembly factories are detailed, well documented, and currently being validated by hands-on experience. Safety and schedule risks have been assessed and seem manageable.
- QA procedures are designed and being refined and implemented. More details follow in the talk of Dan Cronin-Hennessy.
- More information on factory tooling, setup, logistics, and other details is provided in the Extra Slides.

Factory Procedure Videos

- A selection of short videos of many of the steps in the production process has been prepared by Nathaniel Pearson and is posted at http://www.umn.edu/~poling/NOvA_CD2/.

1_Extrusion_Gluing_and_Trimming.mov
2_Side_Seal_Installation.mov
3_Raceway_Installation.mov
4_Stringing_Machine_Operation.mov
5_Stringing_Far_End.mov
6_End_Plate_Installation.mov
7_Manifold_Cover_Installation.mov

WBS 2.4.5.3 (K. Kephart) Pallet Motion Systems

- Commercial air-caster system with motorized pallet jack
  - Training provided by vendor
  - Imposes requirements on factory/warehouse loading docks and floors

Floor Crane

30-foot span, 2-ton capacity, motorized winch

Comments on Extrusion Inspection at Factory #1

- QA procedures for raw extrusions at Factory #1 are designed to intercept defective extrusions before assembly and provide rapid feedback to extruder.
  - Visually inspect for damage, irregularities, interior and exterior cleanliness.
  - Verify exterior and interior dimensions – record all dimensional data in DB.
  - Pieces trimmed from extrusions will be tested for reflectivity and adherence to specifications – record results in DB
  - Test for structural defects by destructive pressure testing of a small sample from each extrusion run.
  - **All assembled modules are subjected to 20 psi leak testing at Factory #2.**

Rolling Table

Full-size prototype in use at MN.

Gluing Table

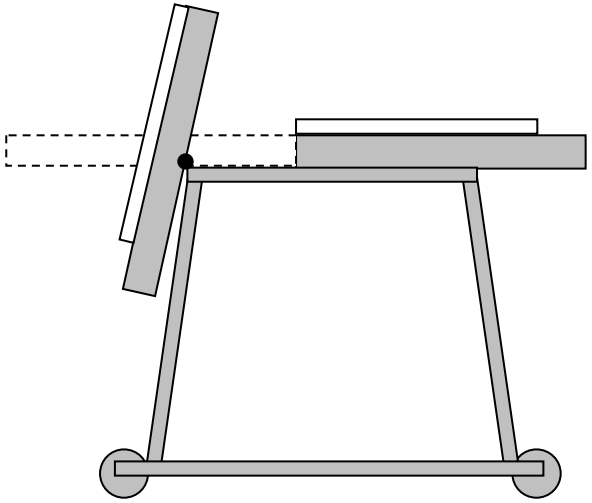

Gluing Platform

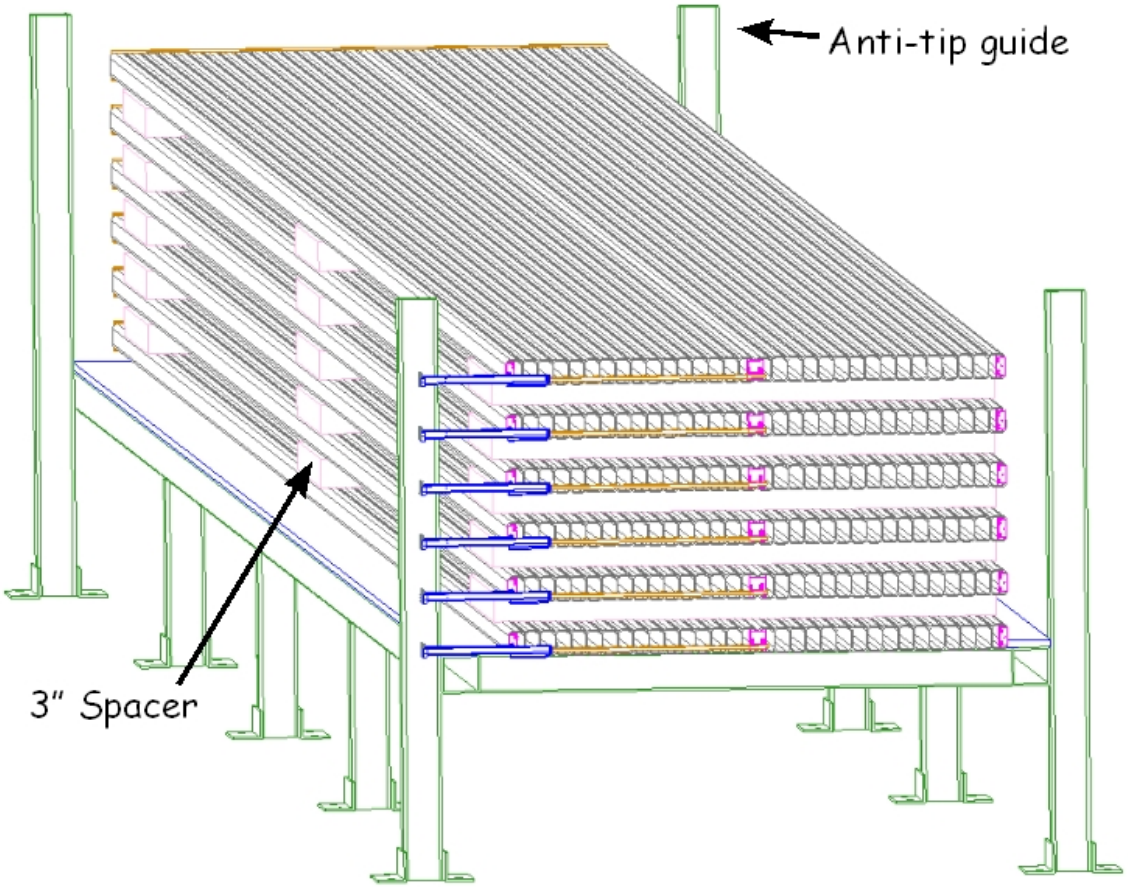

Install Side and Center Seals

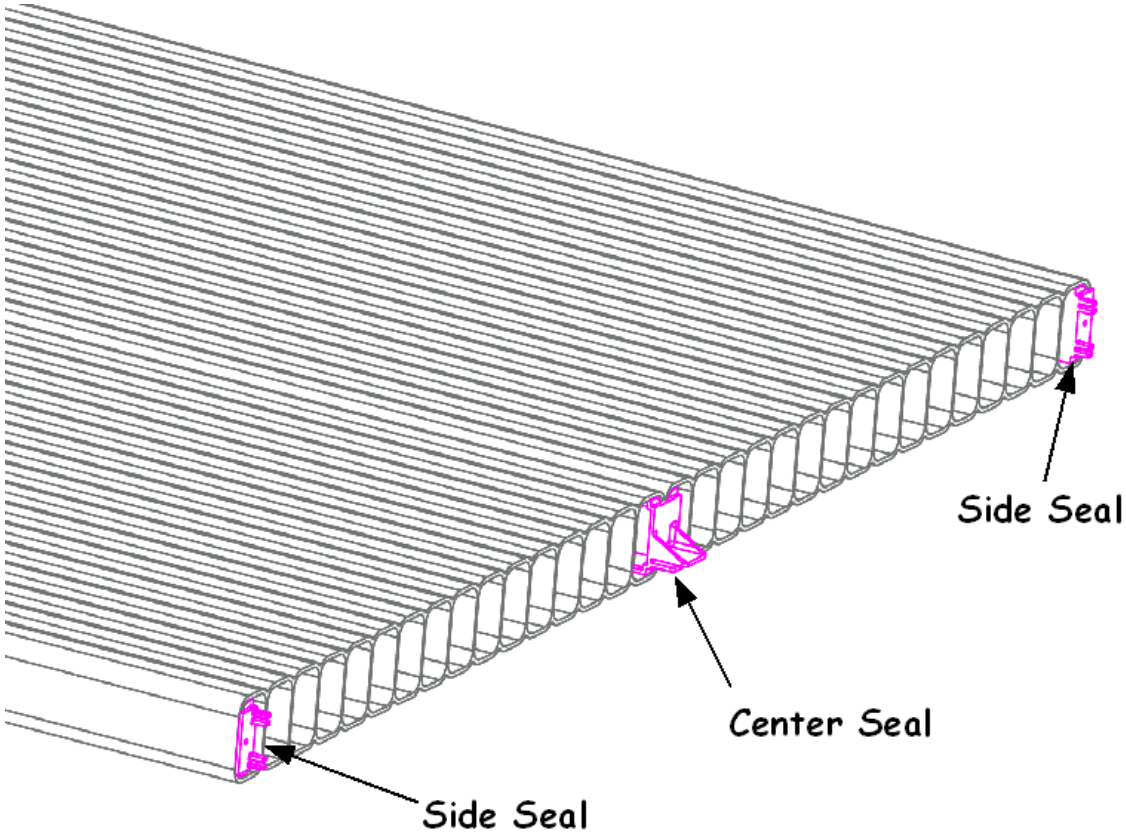

Attach Lower Fiber Raceway

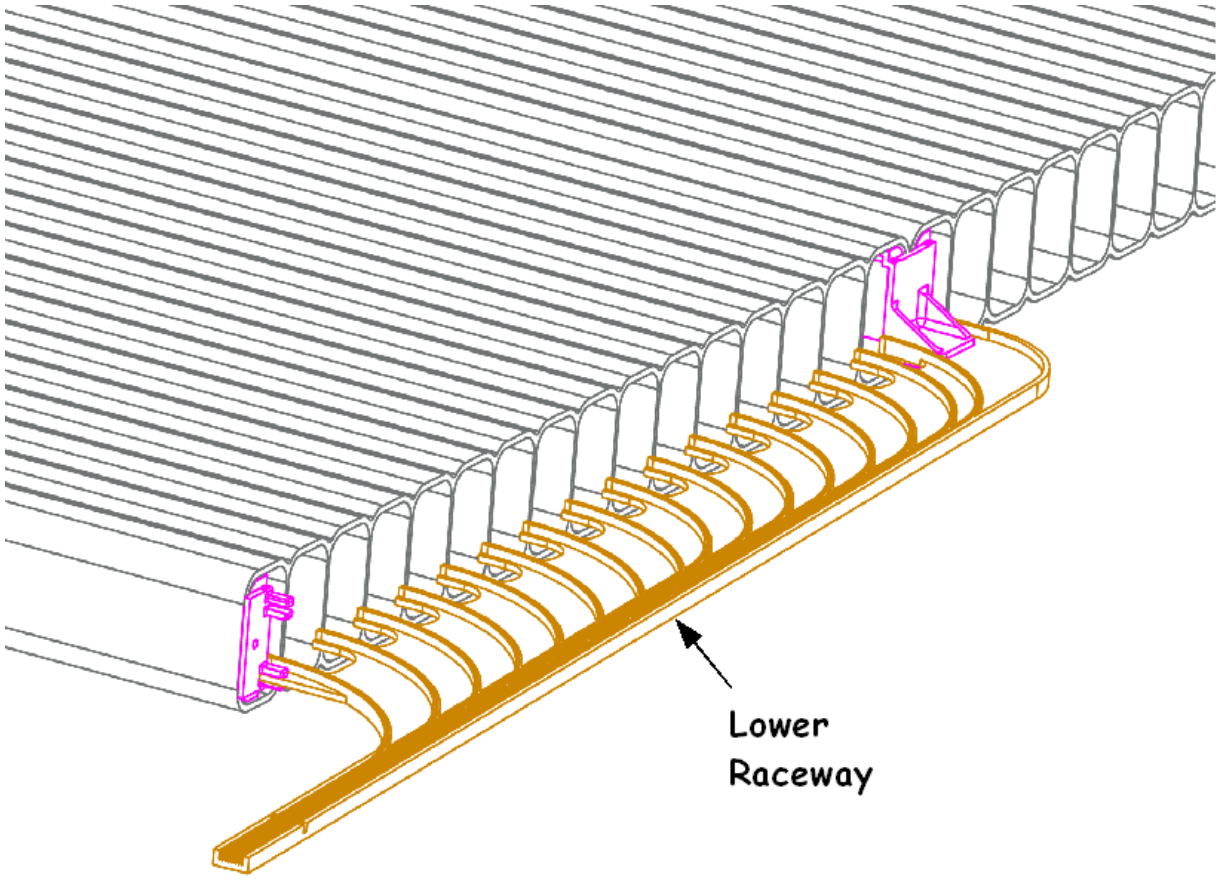

Attach Manifold Snout Lower Half

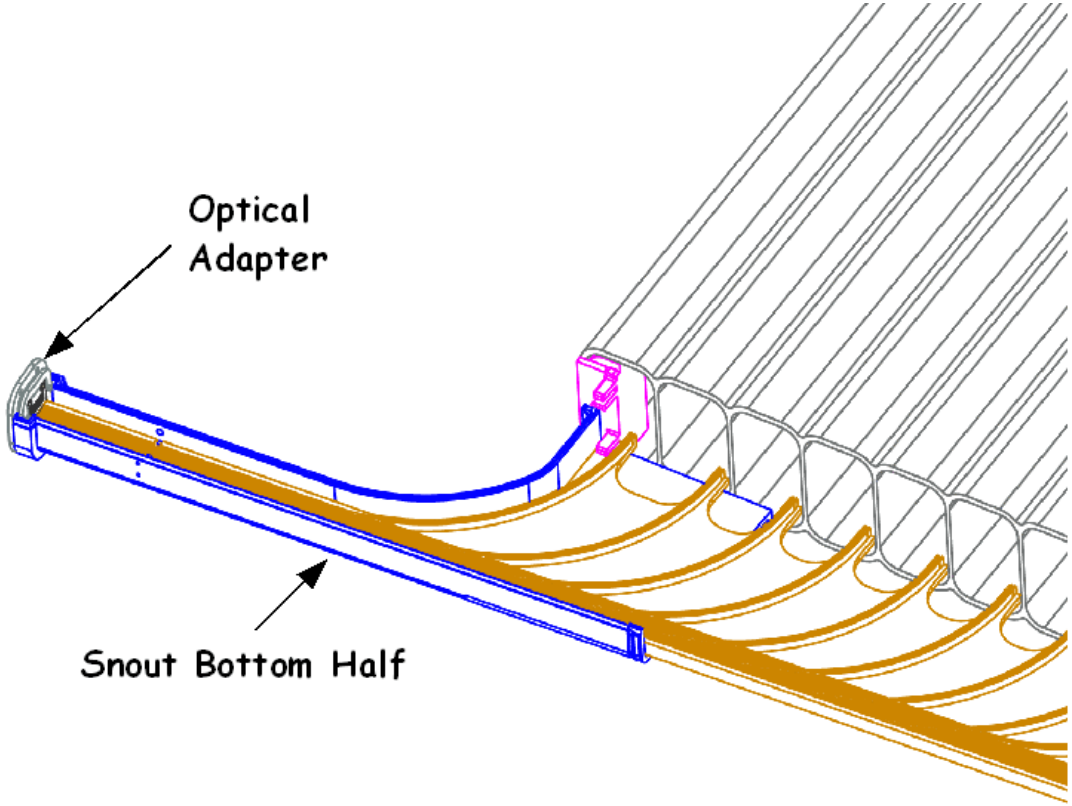

Stringing Machine and Puller

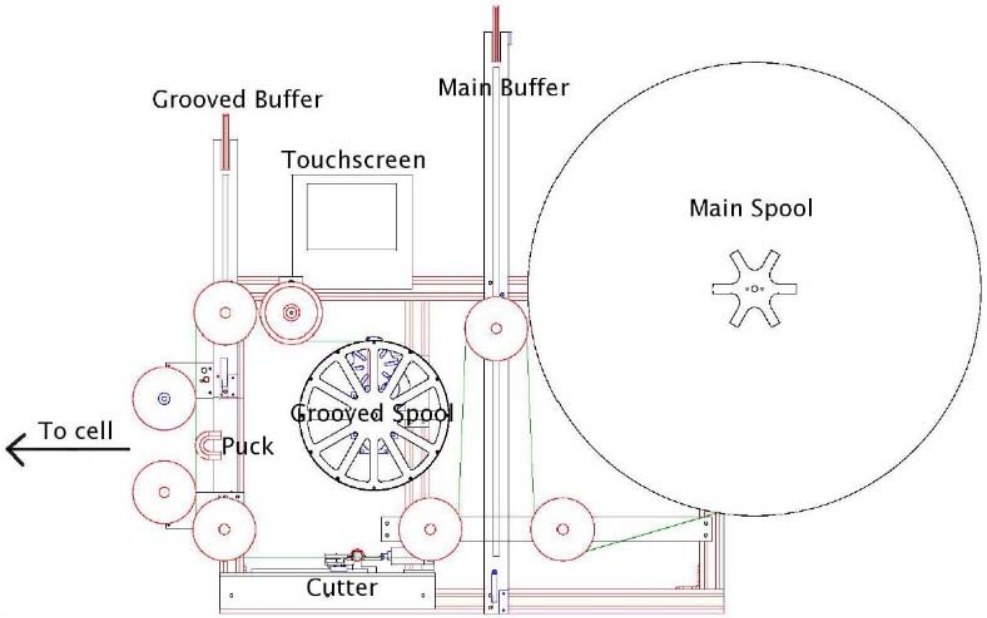

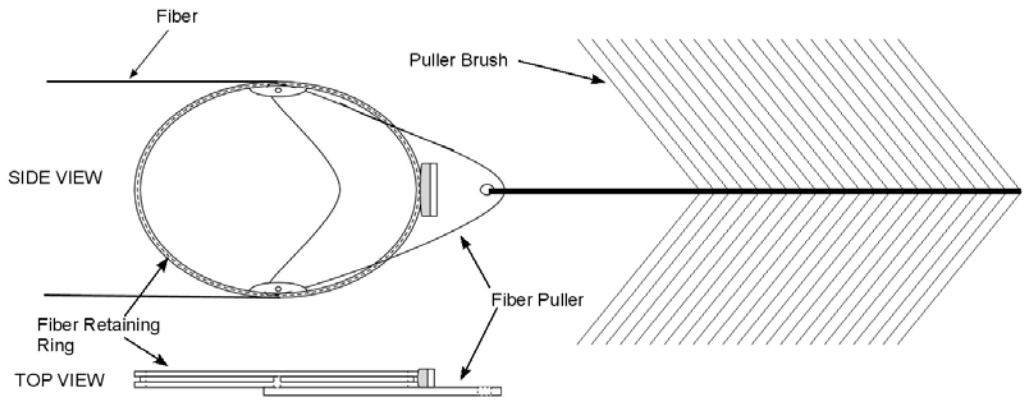

Fiber retaining ring and puller

Threading Fibers through Snout

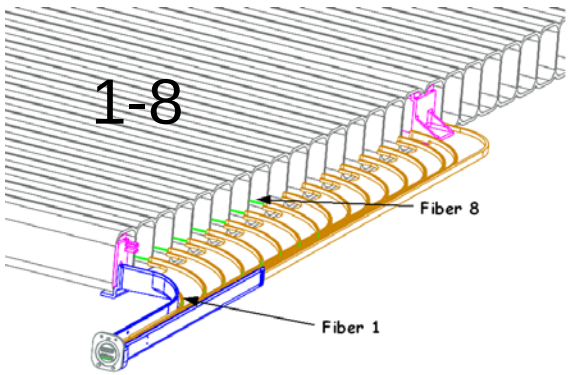

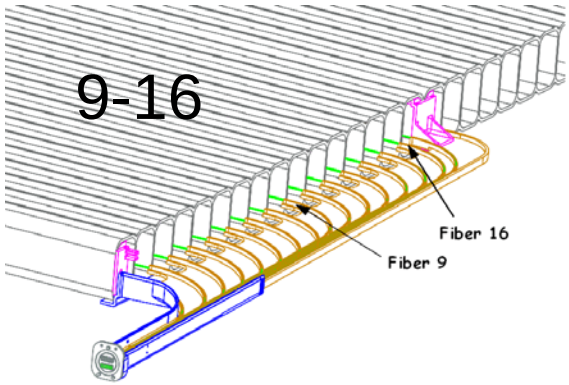

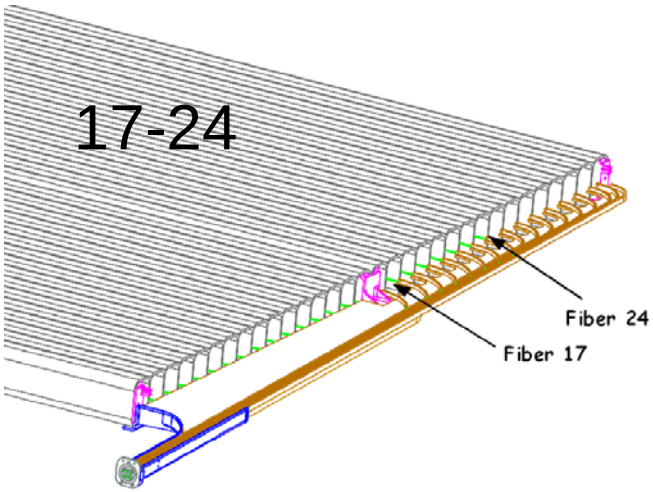

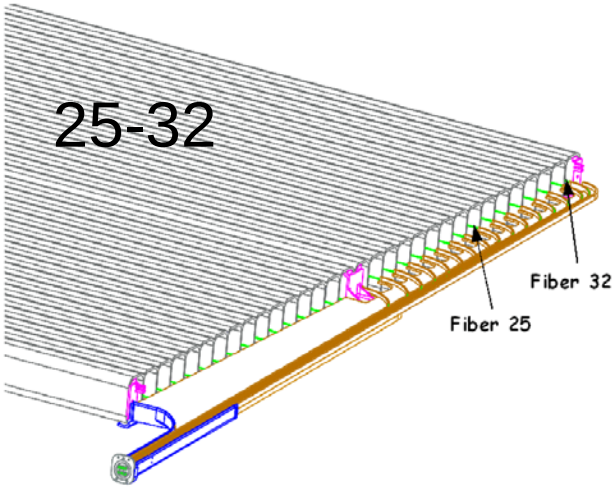

Glue End Plate, Snout Top, Fill Tube, Manifold Cover

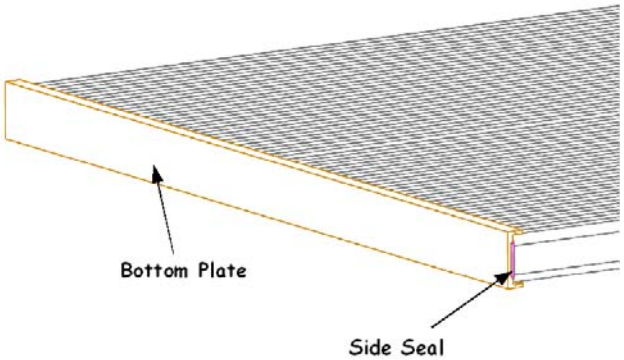

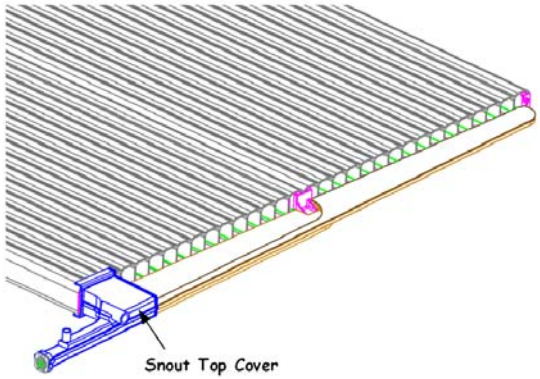

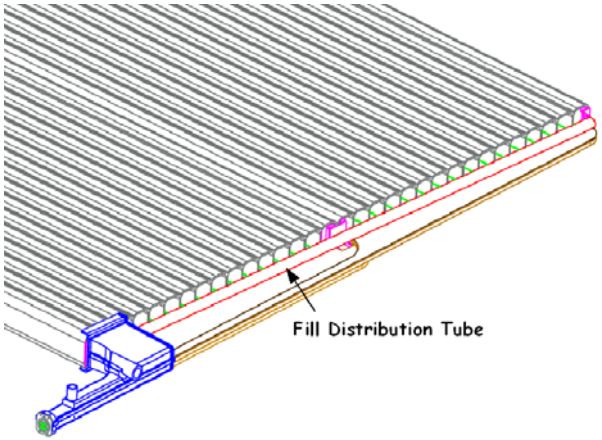

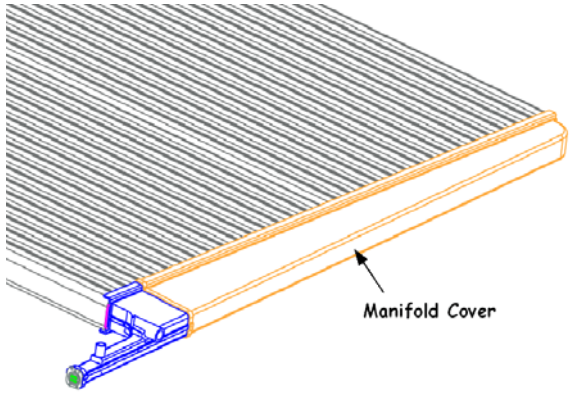

Facing the Optical Adapter