APD Module
wbs 2.6.1

June 5, 2007

Roger Rusack

Outline

- Project Description.
- Technical Status.
- Production Plans.

- Avalanche Photodiode (APD).
  - Design, assembly and QA/QC.
- APD Module
  - Design, assembly and QA/QC
- Assembly testing.

APD

- Readout of the fibers. Both ends of the fibers are readout with a single APD.
- 32 APD's in a single 4 by 18 array to readout one module.
- APD is not a classic linear APD manufactured by Hamamatsu operated at a gain of 100.
- Operating temperature is -15° C to keep shot noise at the same level as the amplifier noise.
- Signal-to-noise > 10 for muon at far end of the 15 m long cell.

Management Structure

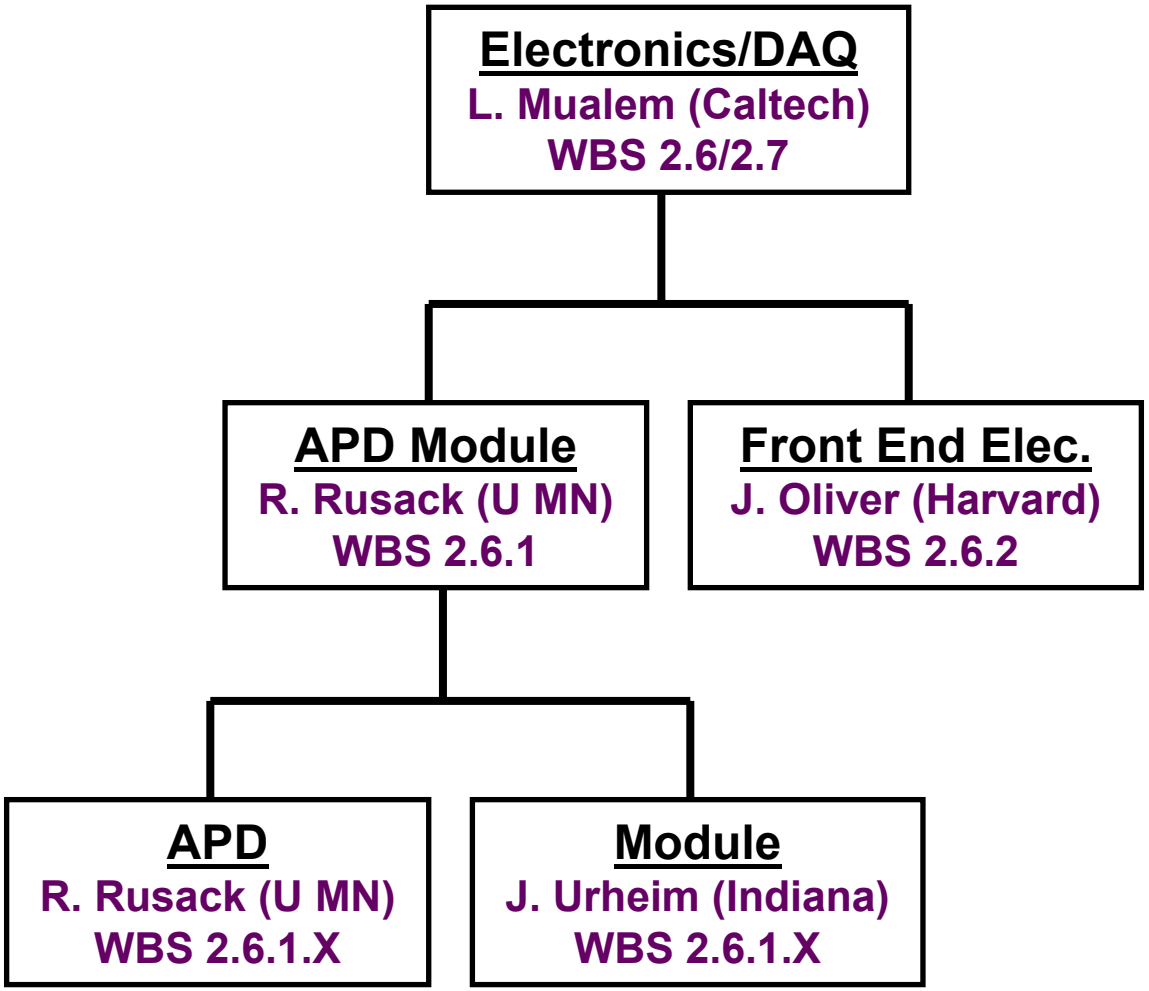

APD Specifications

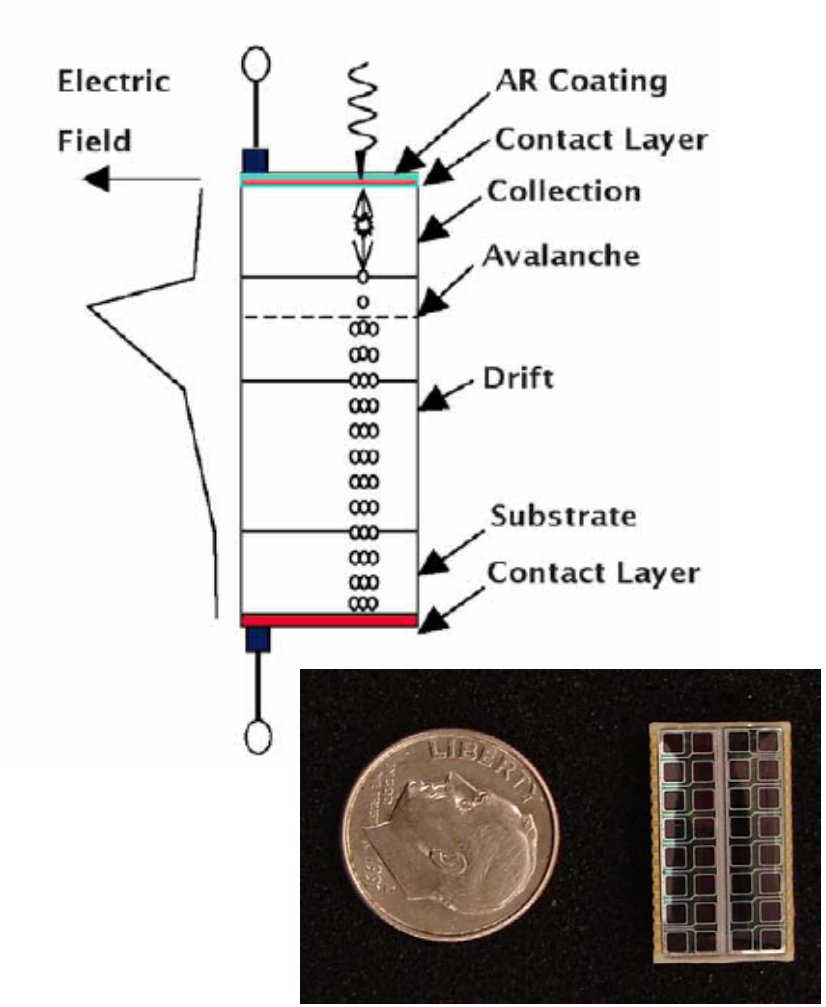

Pixel Active Area	1.95 mm × 1.0 mm
Pixel Pitch	2.65 mm
Array Size	32 pixels
Die Size	15.34mm × 13.64mm
Quantum Efficiency (>525 nm)	85%
Pixel Capacitance	10 pF
Bulk Dark Current (I_B) at 25 C	12.5 pA
Bulk Dark Current (I_B) at -15 C	0.25 pA
Peak Sensitivity	600 nm
Operating Voltage	375 ± 50 volts
Gain at Operating Voltage	100
Operating Temperature (with Thermo-Electric Cooler)	-15°C
Expected Signal-to-Noise Ratio (Muon at Far End of Cell)	10:1
APD channels per plane	384
APD arrays per plane	12
Total number of planes	1178
Total Number of APD arrays	14,136
APD pixels total	452,352

APD Pixel Layout

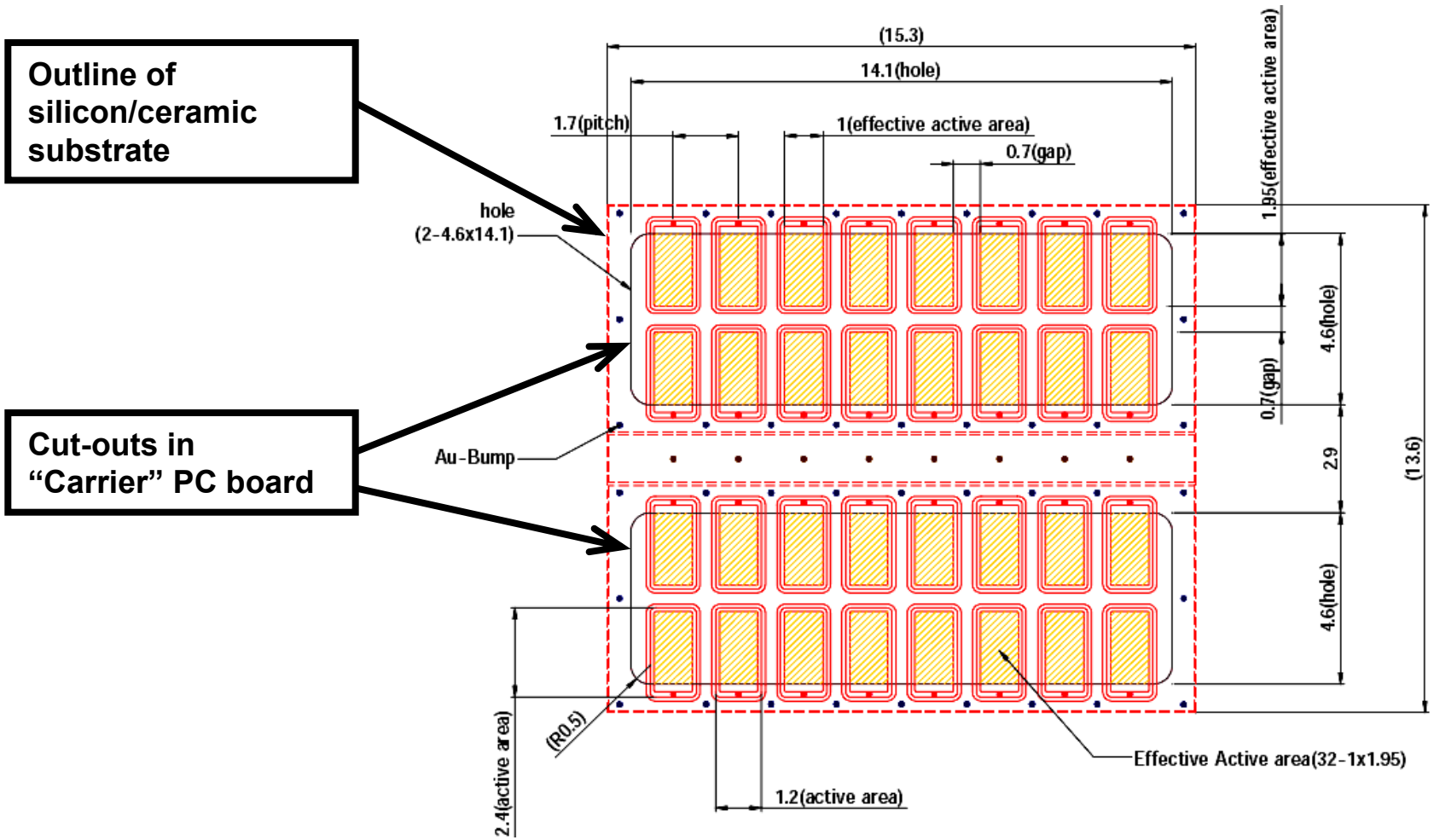

Custom Pixel Shape

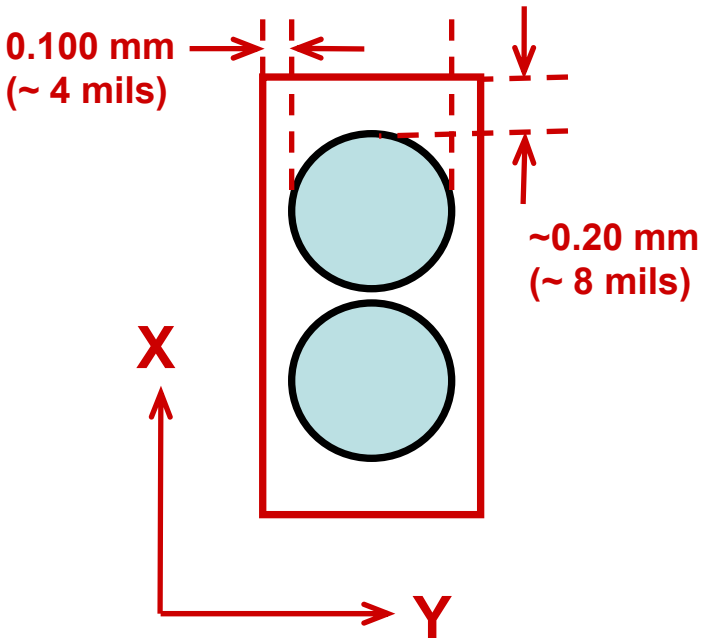

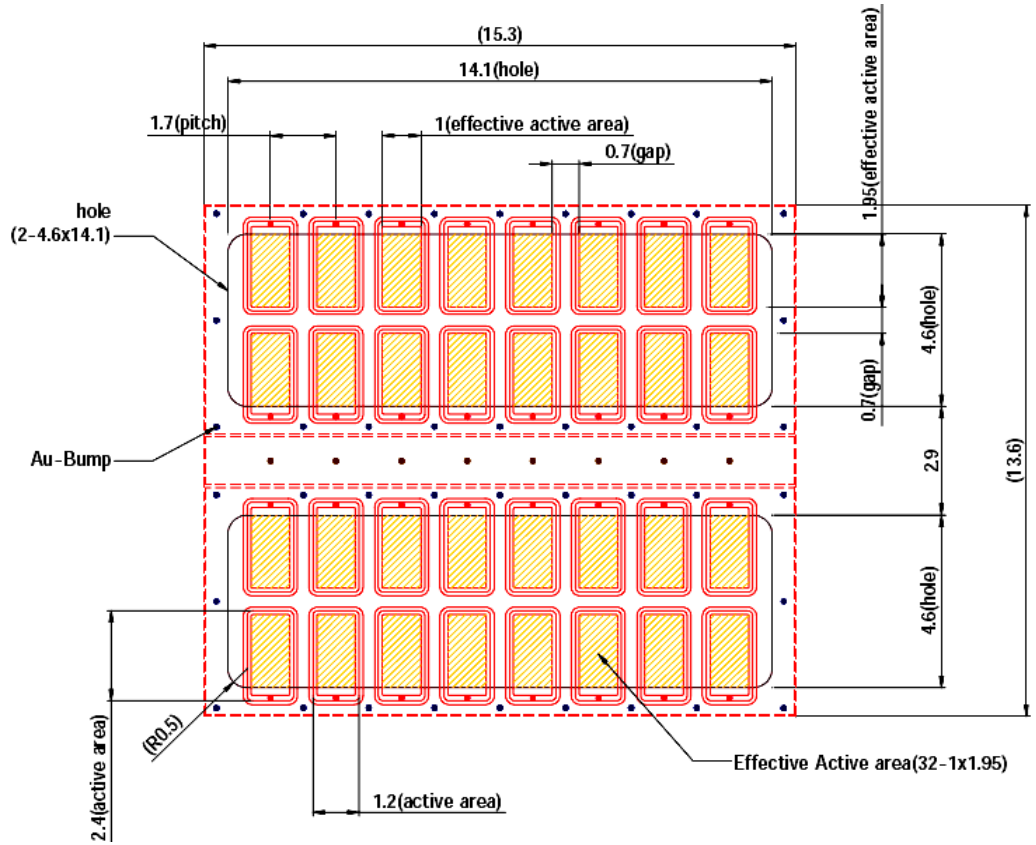

Production Schedule

- 20 Prototypes received and being tested.
- Proceed to contract for 17,000 parts October ‘07.
- Pilot production run will be used in the IPND with delivery April ‘08.
- Launch production FY09.
- Complete delivery in two years.

APD Technical Status

Prototype Testing

20 prototypes received from Hamamatsu

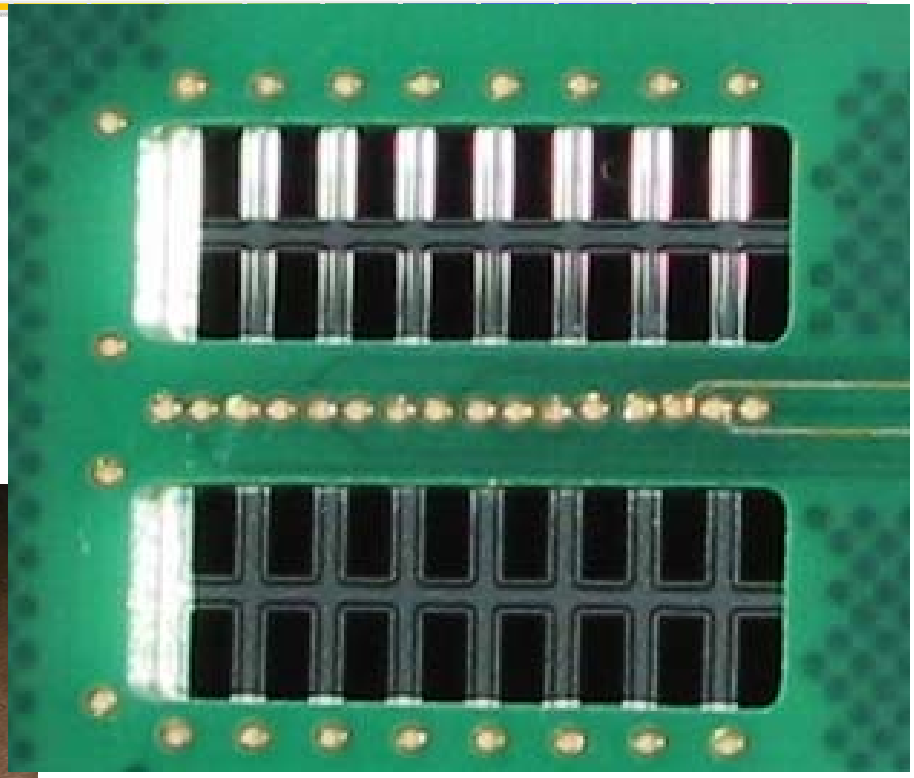

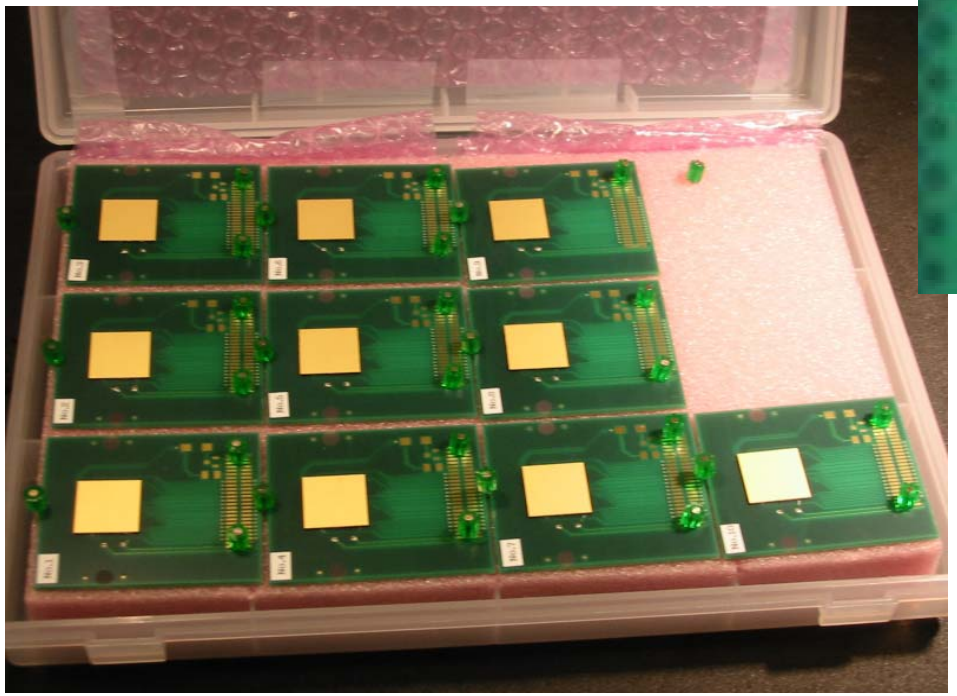

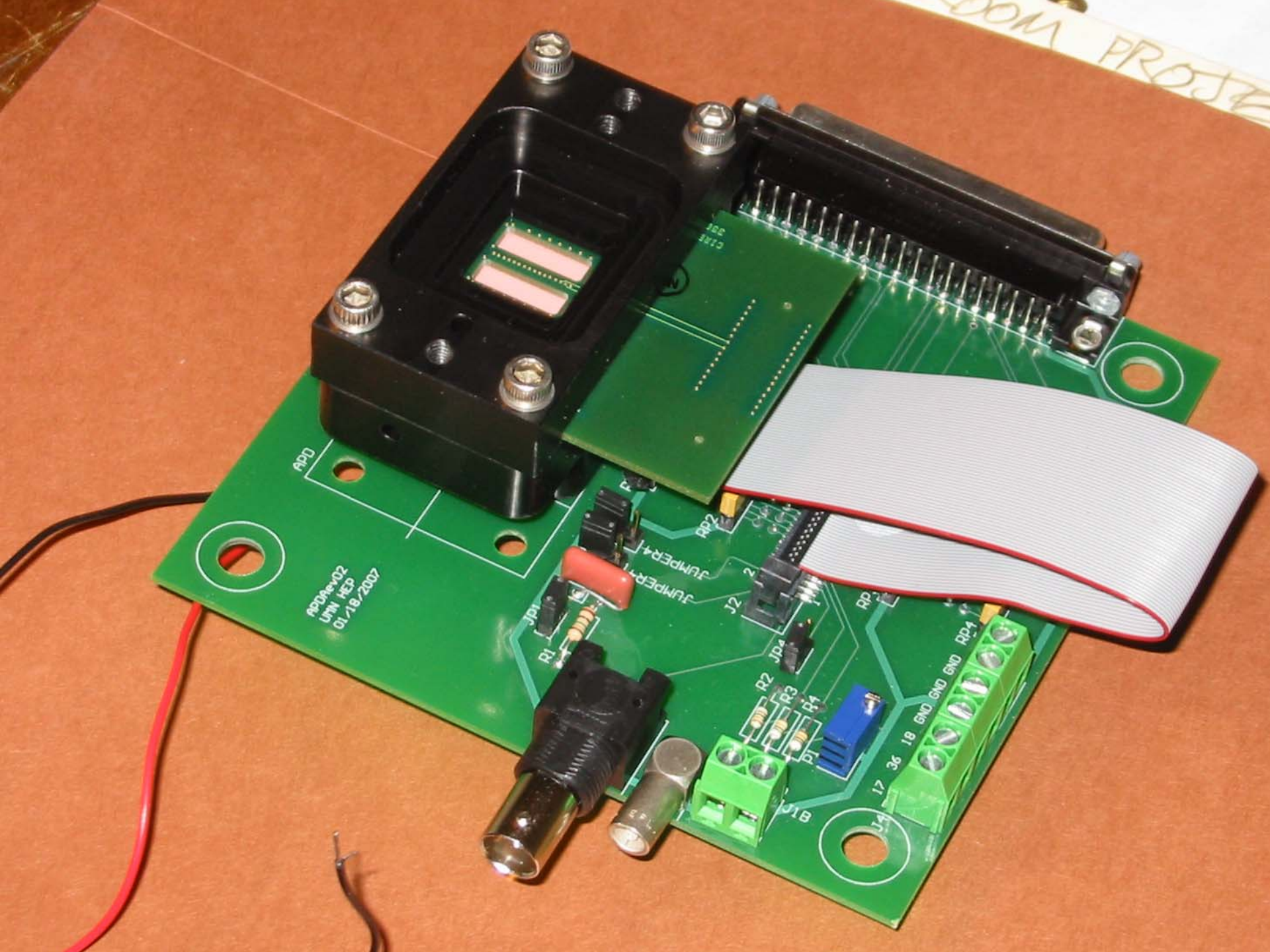
APD
APDRev02
UMN HEP
01/18/2007
JUMPER4
JUMPER1
RP2
J2
JP1
R1
JP4
R2
R3
R4
P1
J1B
RP4
GND
GND
GND
18
36
17

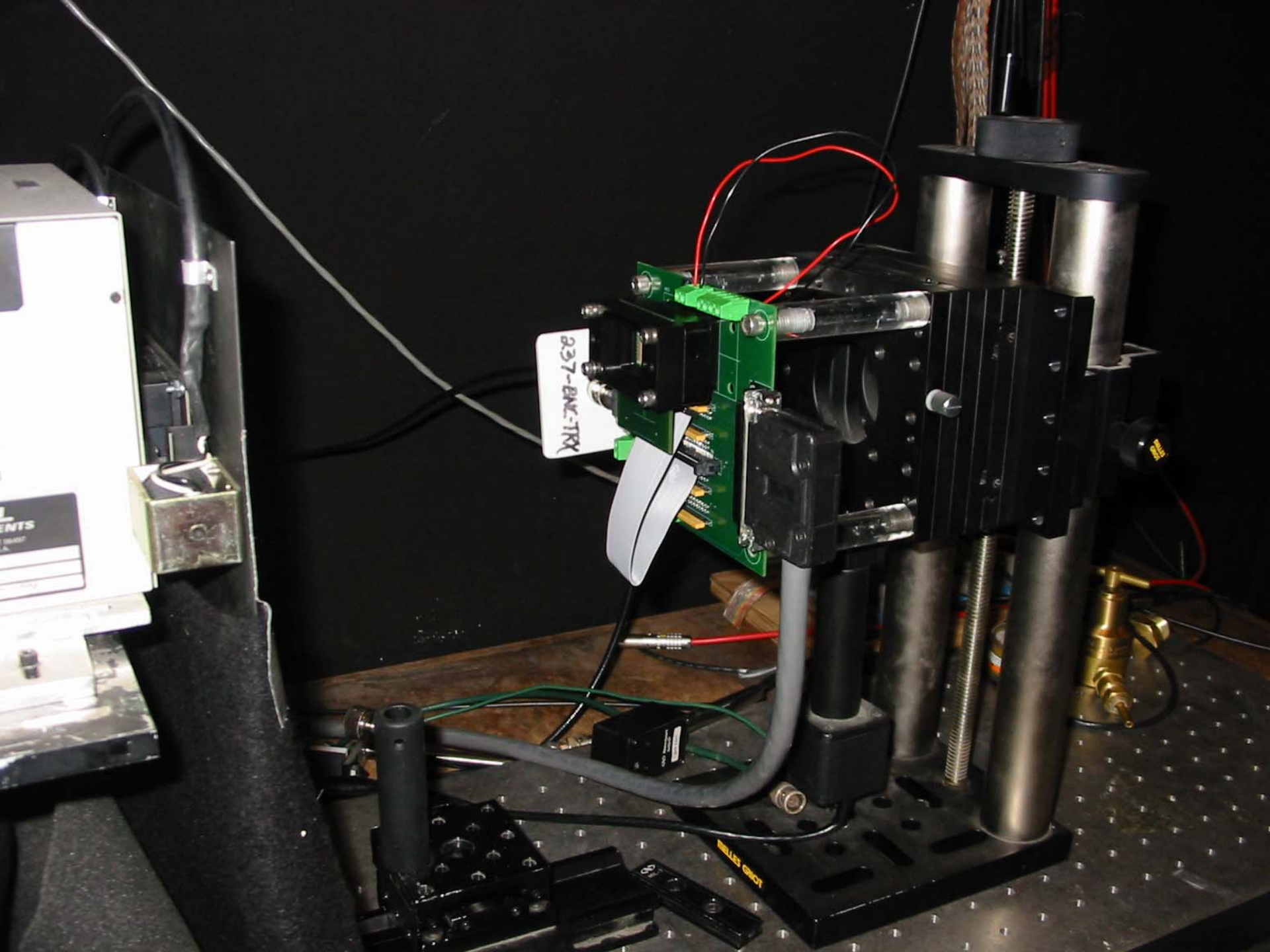
237-BNC-TRX

Automated APD measurement stand.

VI's for breakdown, heat flow, dark current and gain.

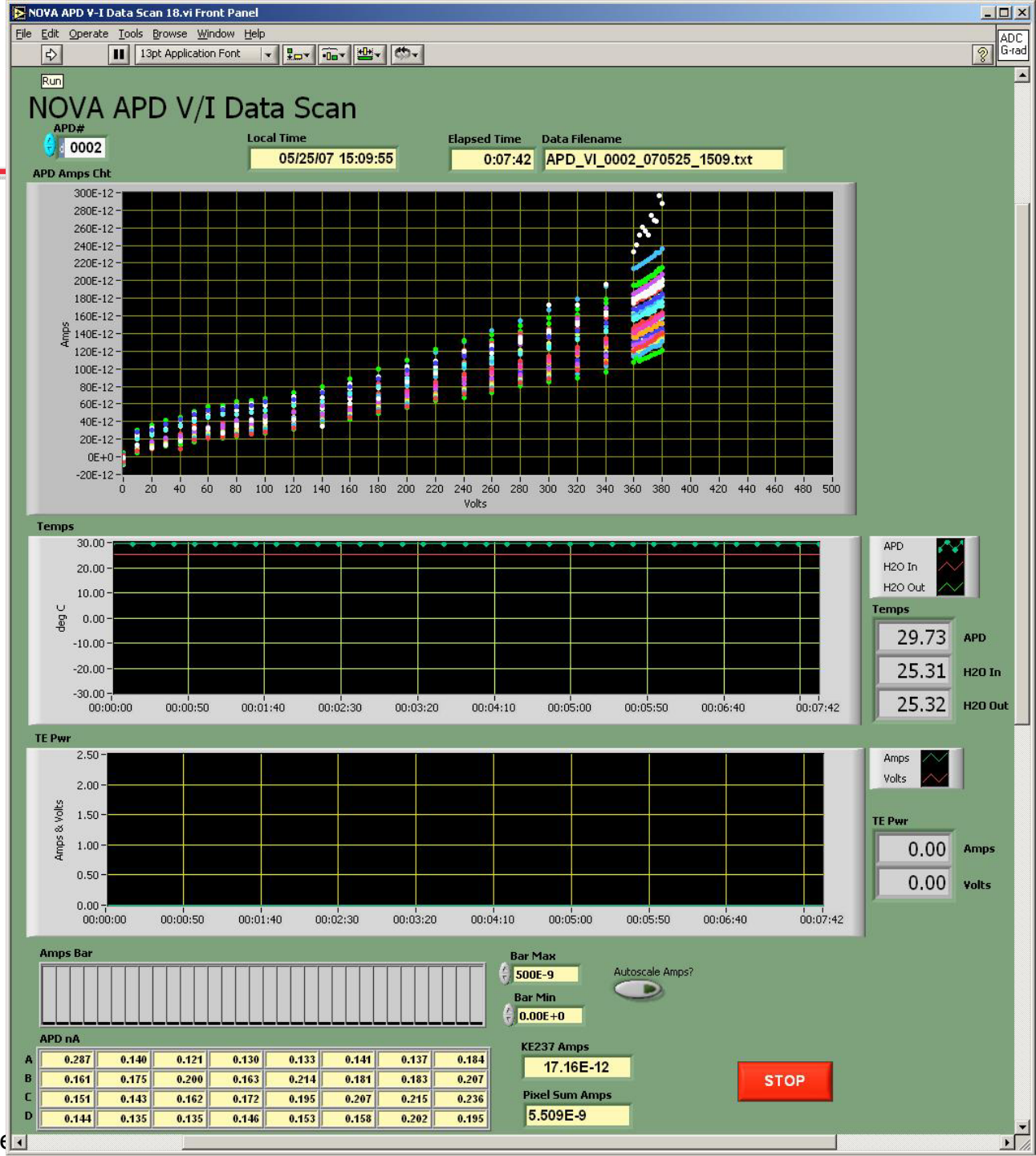

Gain and Dark Current

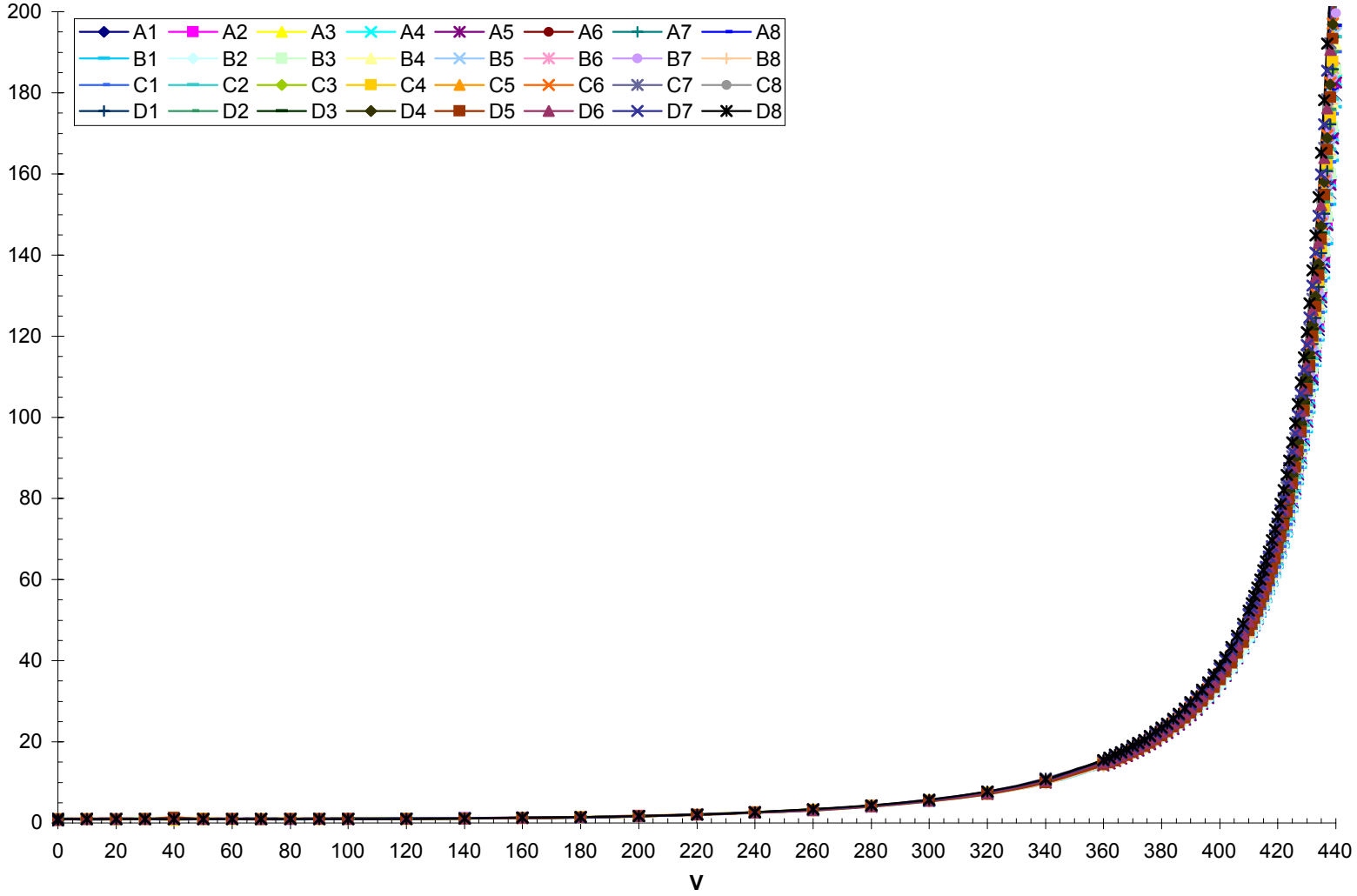

Bulk Dark Current v Gain

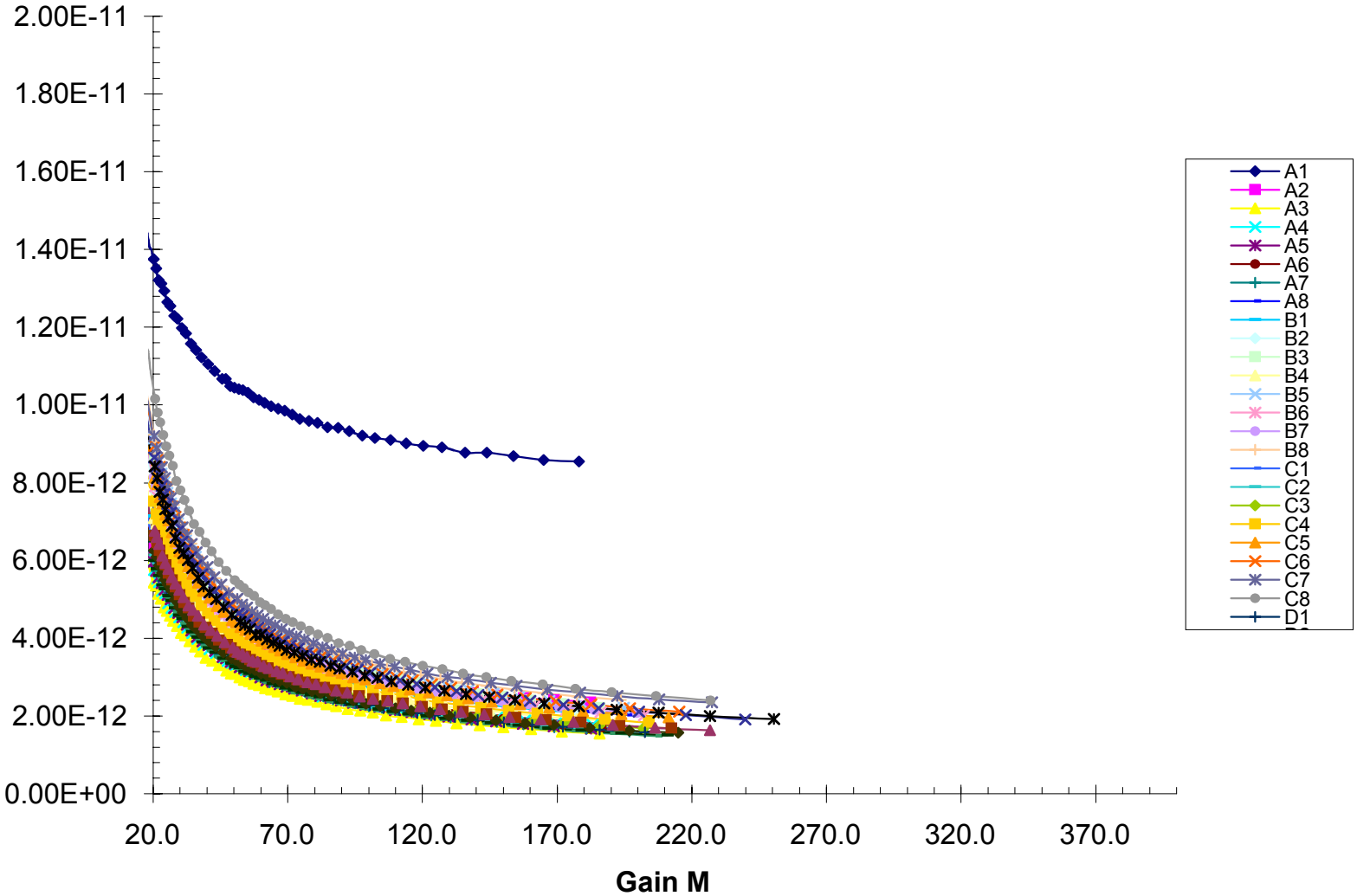

Spread in Operating Voltage

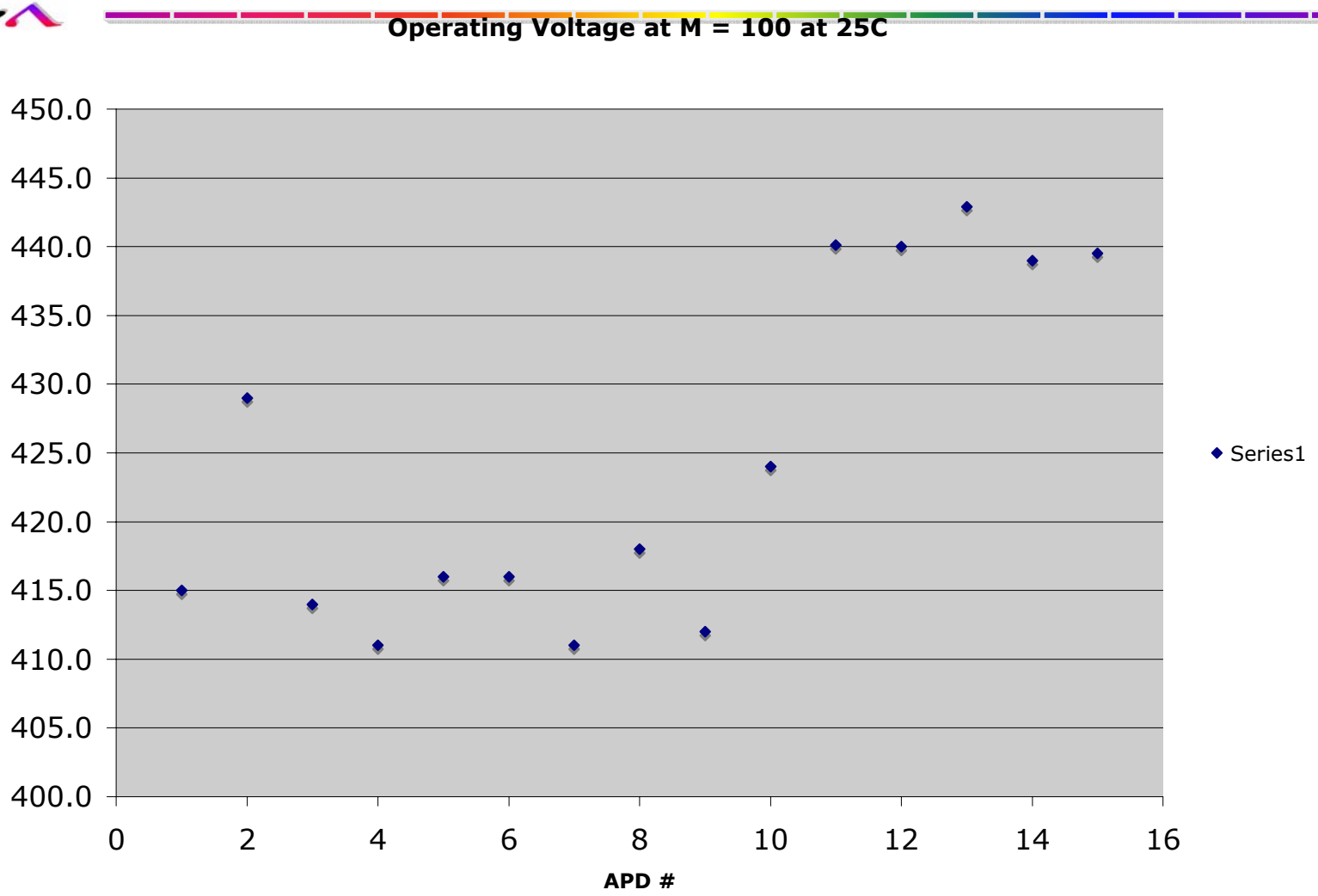

Spread in Gain.

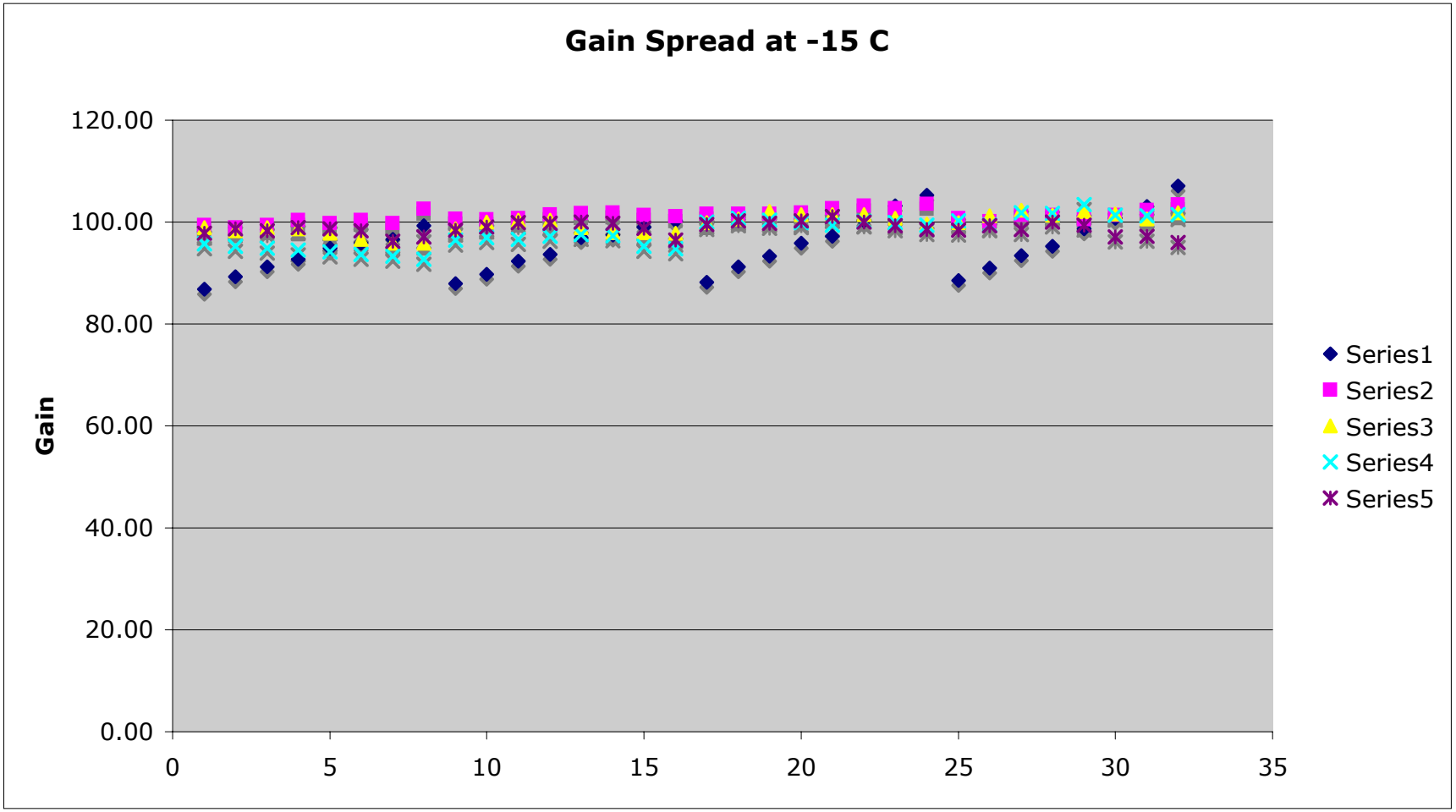

Dark Current at room temp

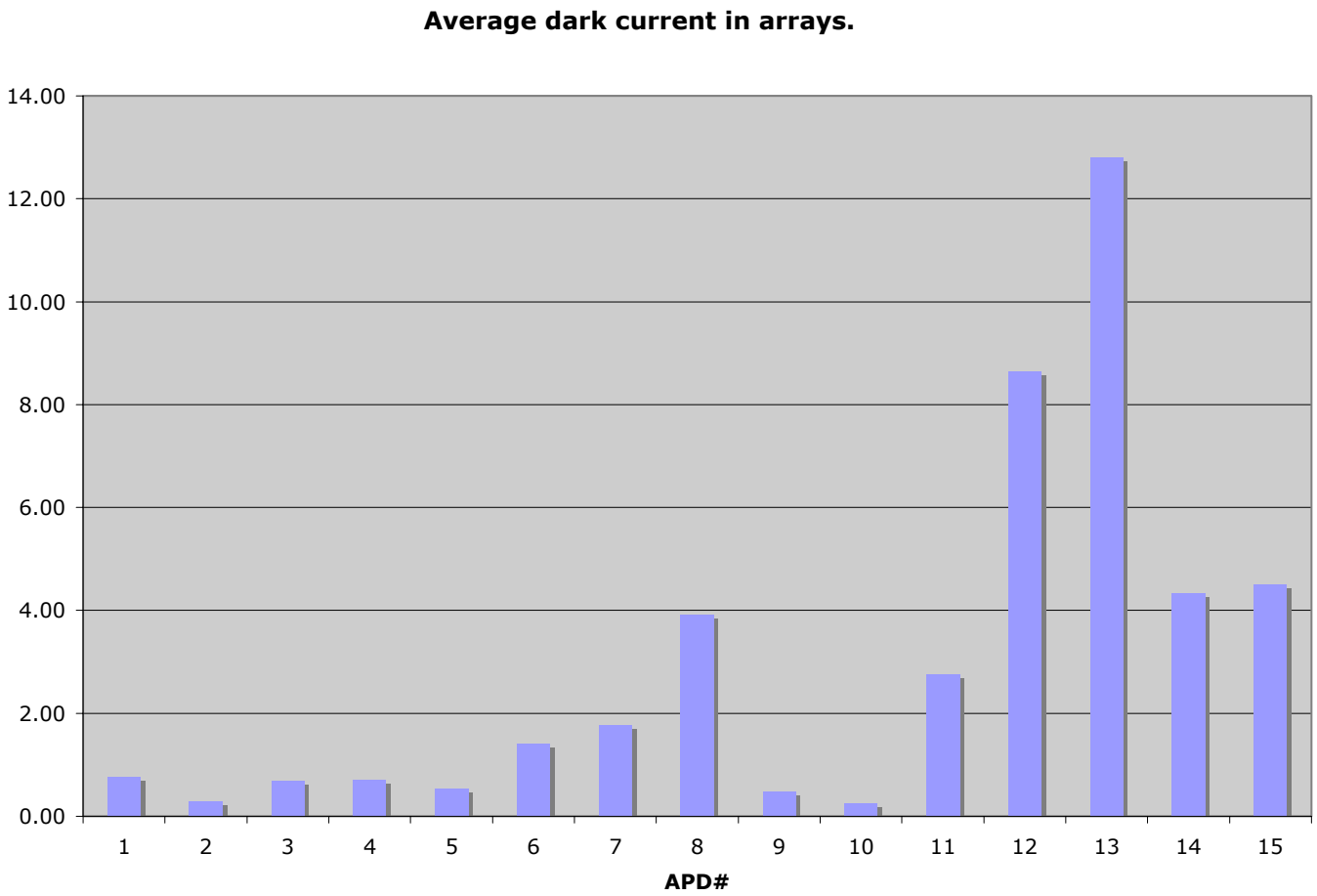

Average value of dark current at gain 100 at 25°C - spec < 5nA.

I_B v Temperature.

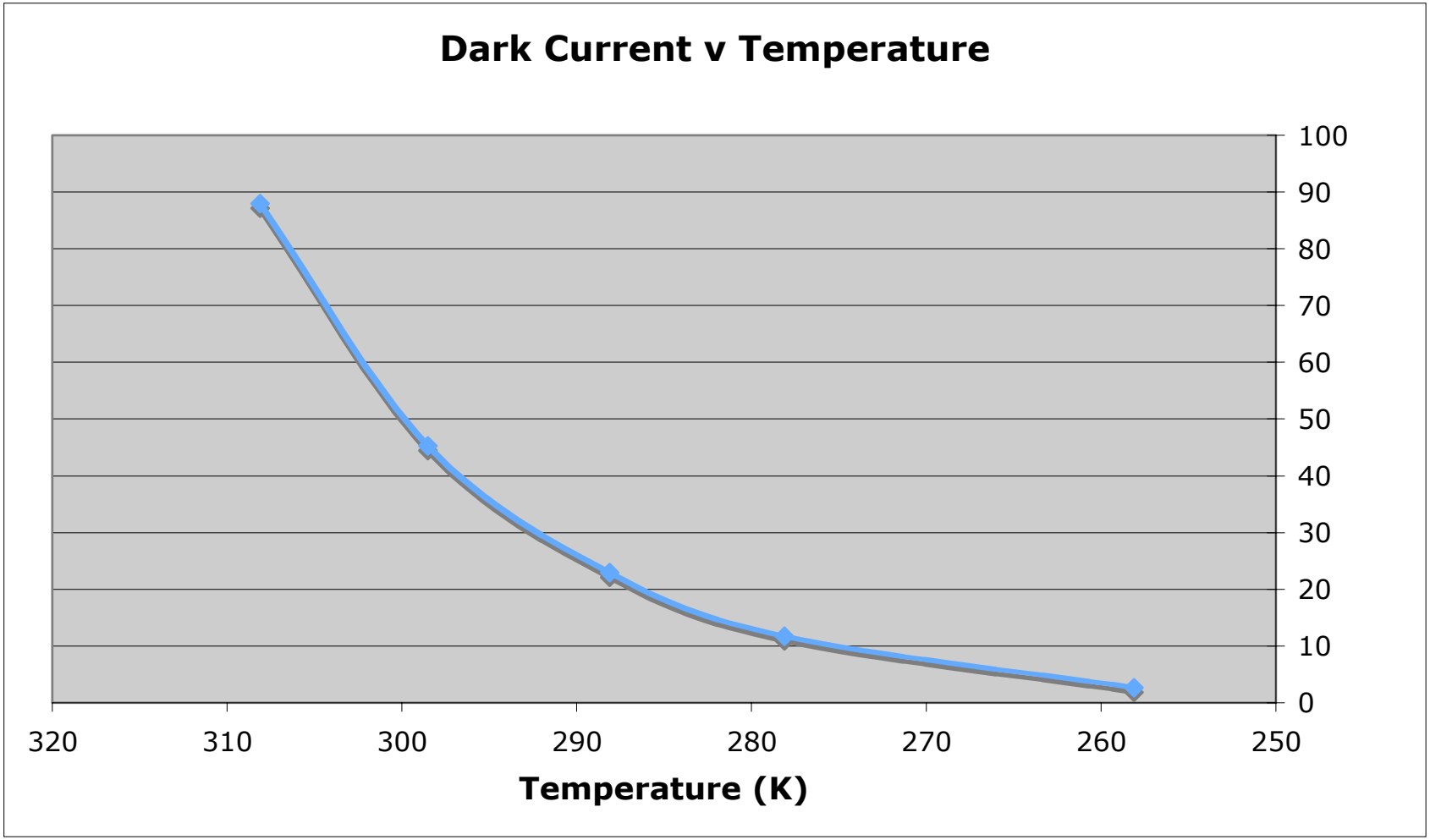

Decrease by a factor of 18 between 25□ and -15 □

Arrhenhuis Plot

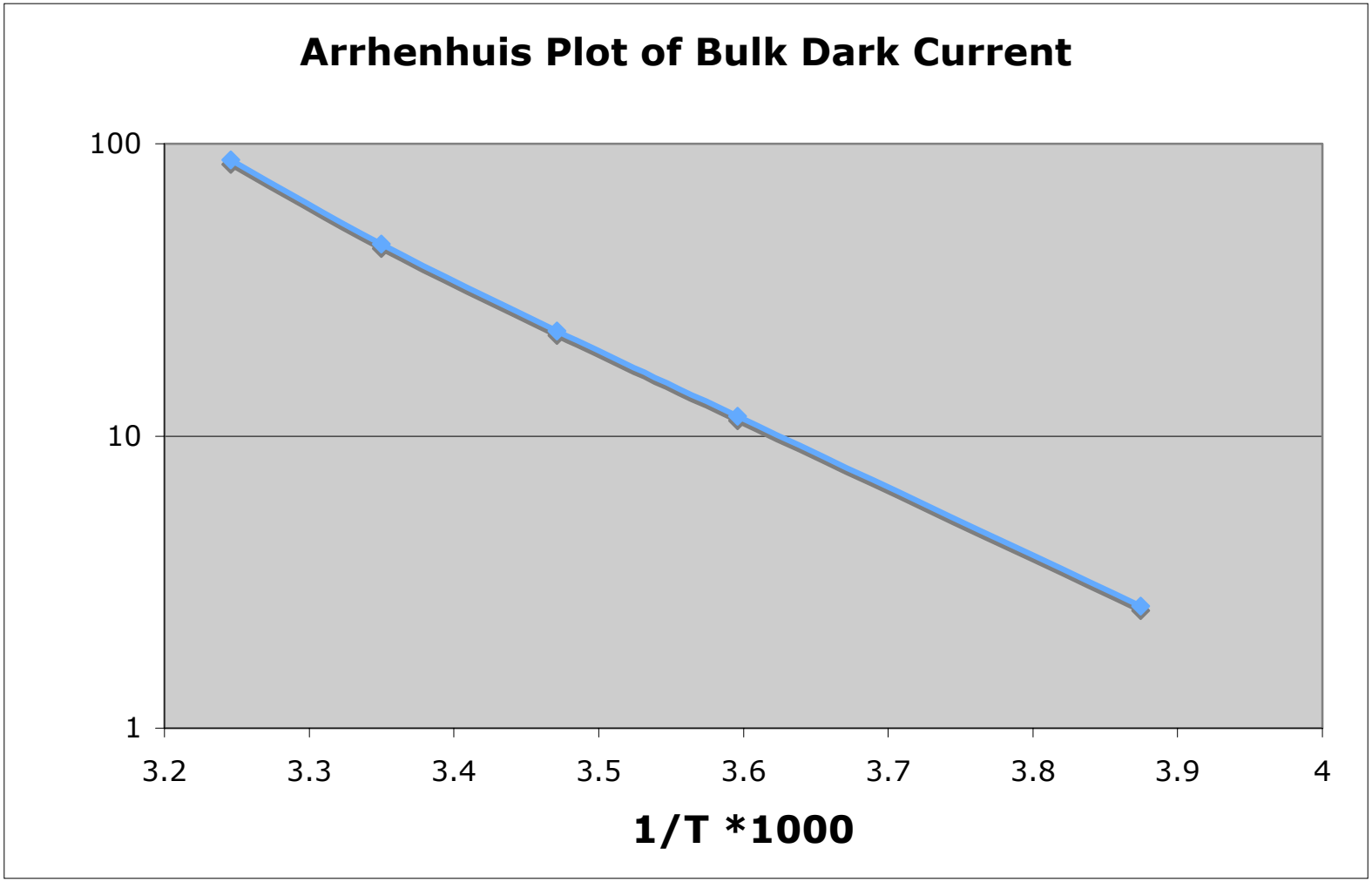

Decrease in dark current behaves as expected.

Plans

- Complete detailed qualification of prototype.
- Connect with front end board & perform system test.
- Contract negotiations with Hamamatsu.
- Pilot production run for IPND start Oct ‘07
- Design and build 2 QA/QC stations.
- Launch production FY09.

APD module

- APD must be house in light tight housing.
- Functions:
  - Light tight
  - Maintain temp at -15 ^{o}C.
  - Align APD with fibers and protect APD from fibers.
  - Allow connection of signals to front-end board.
- We have an almost complete design of the APD module that meets these specs.

APD Module Design Concept

Design used for prototypes for thermal tests

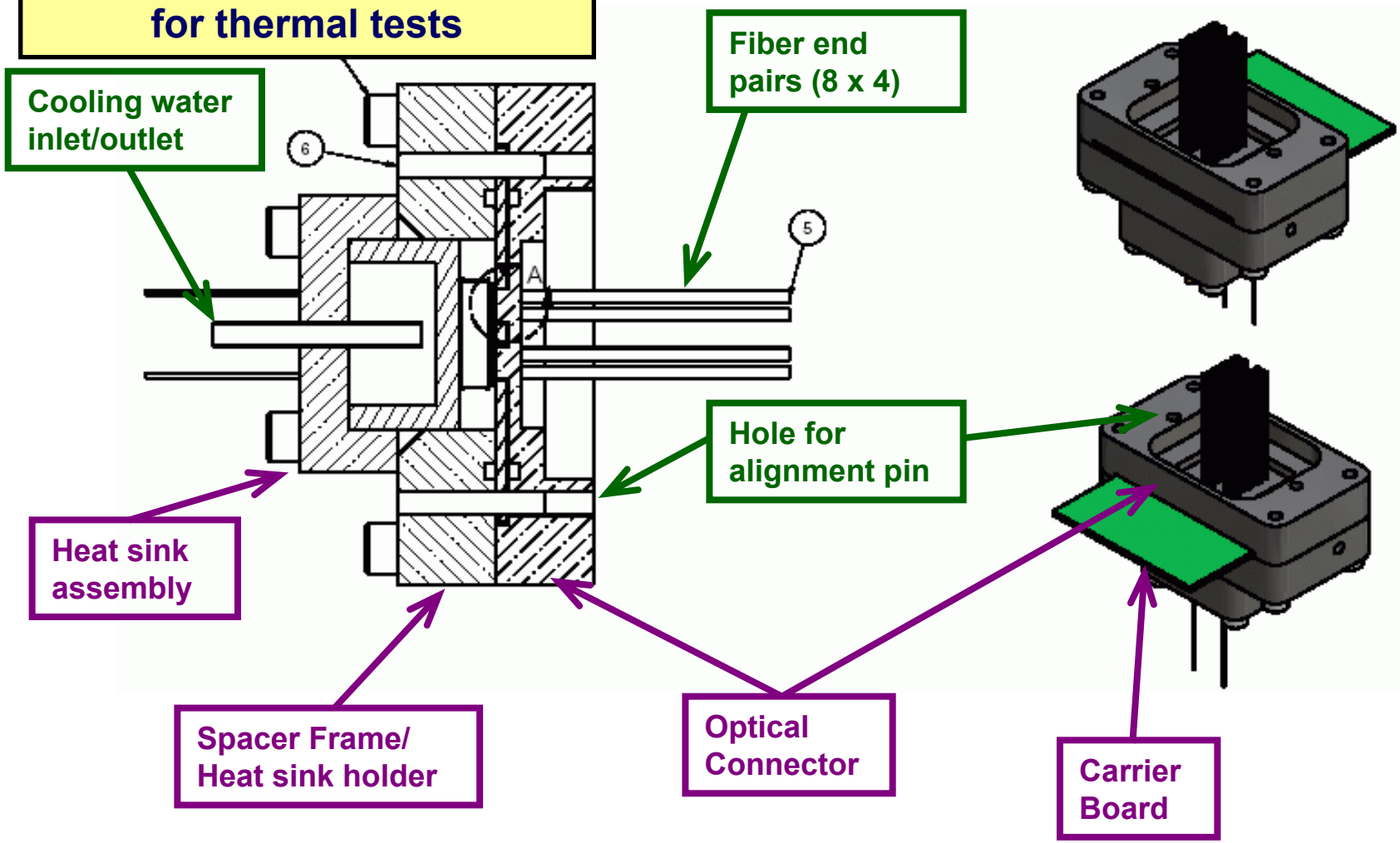

APD Module Design Concept

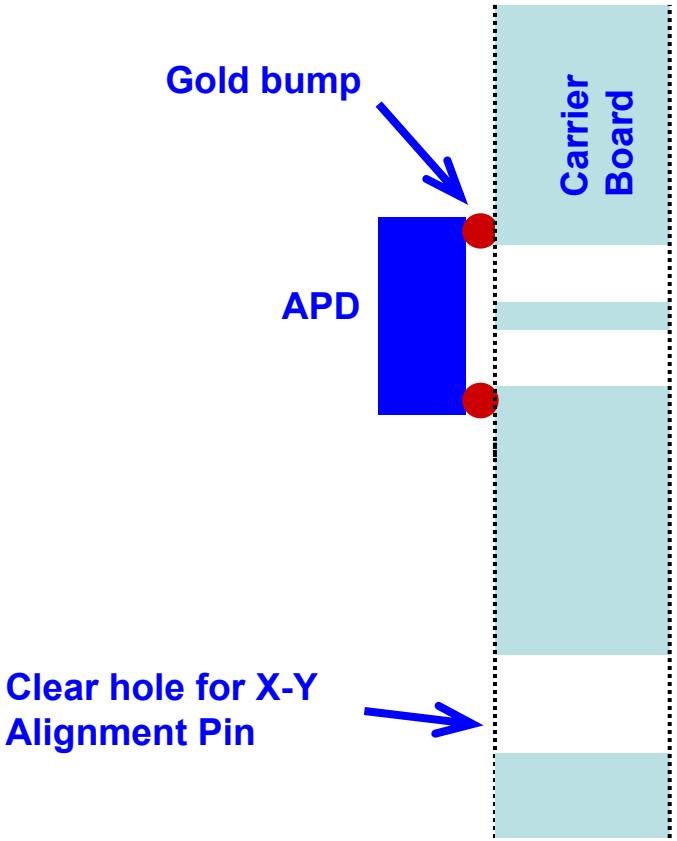

- "Clam-shell" design
  - **APD mounted on Carrier Board by Hamamatsu**
    - **'flip chip' bump bond process: active side of APD array is face down**
    - **slots in board will allow fiber ends in optical connector to access APD pixels**

Note: diagrams are NOT to scale !!!

APD Module Design Concept

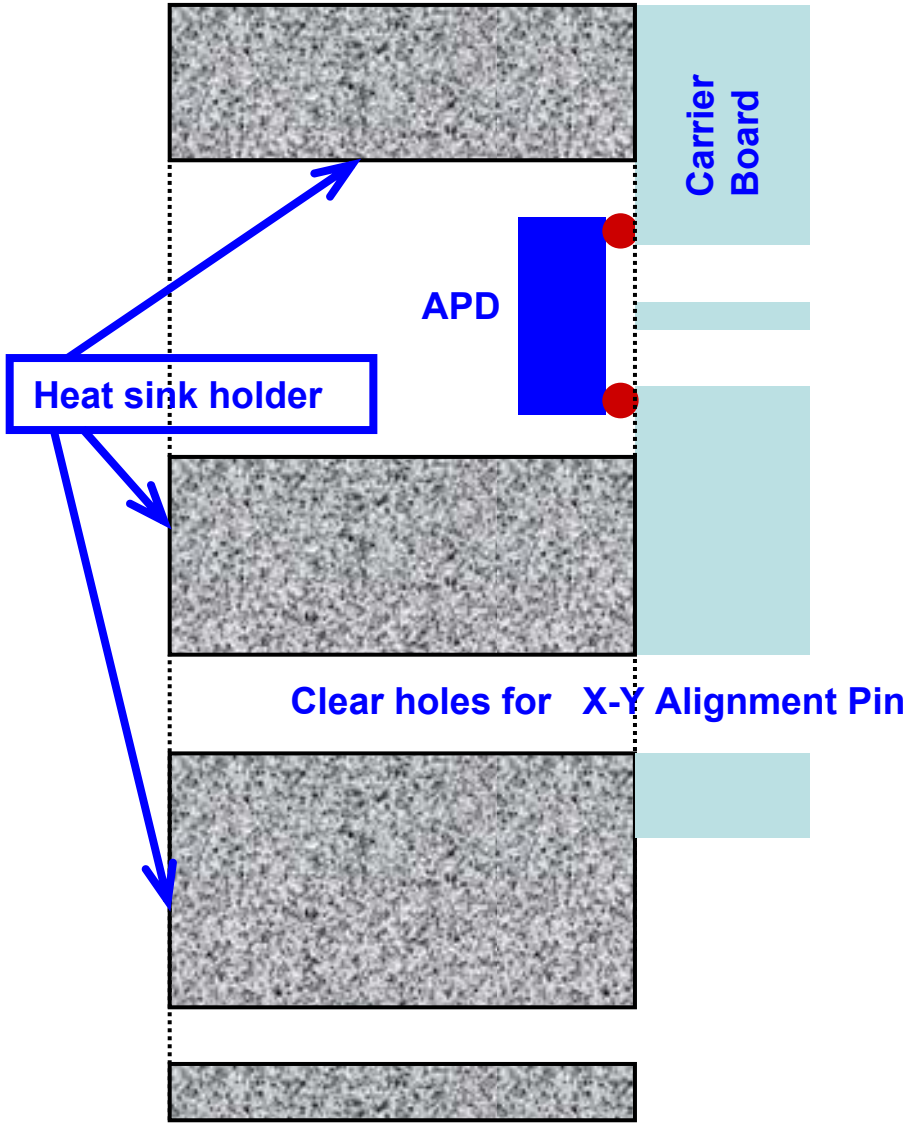

- "Clam-shell" design
  - **APD mounted on Carrier Board by Hamamatsu**
    - **'flip chip' bump bond process: active side of APD array is face down**
    - **slots in board will allow fiber ends in optical connector to access APD pixels**
  - **Heat sink holder**
    - **glued to carrier board**

APD Module Design Concept

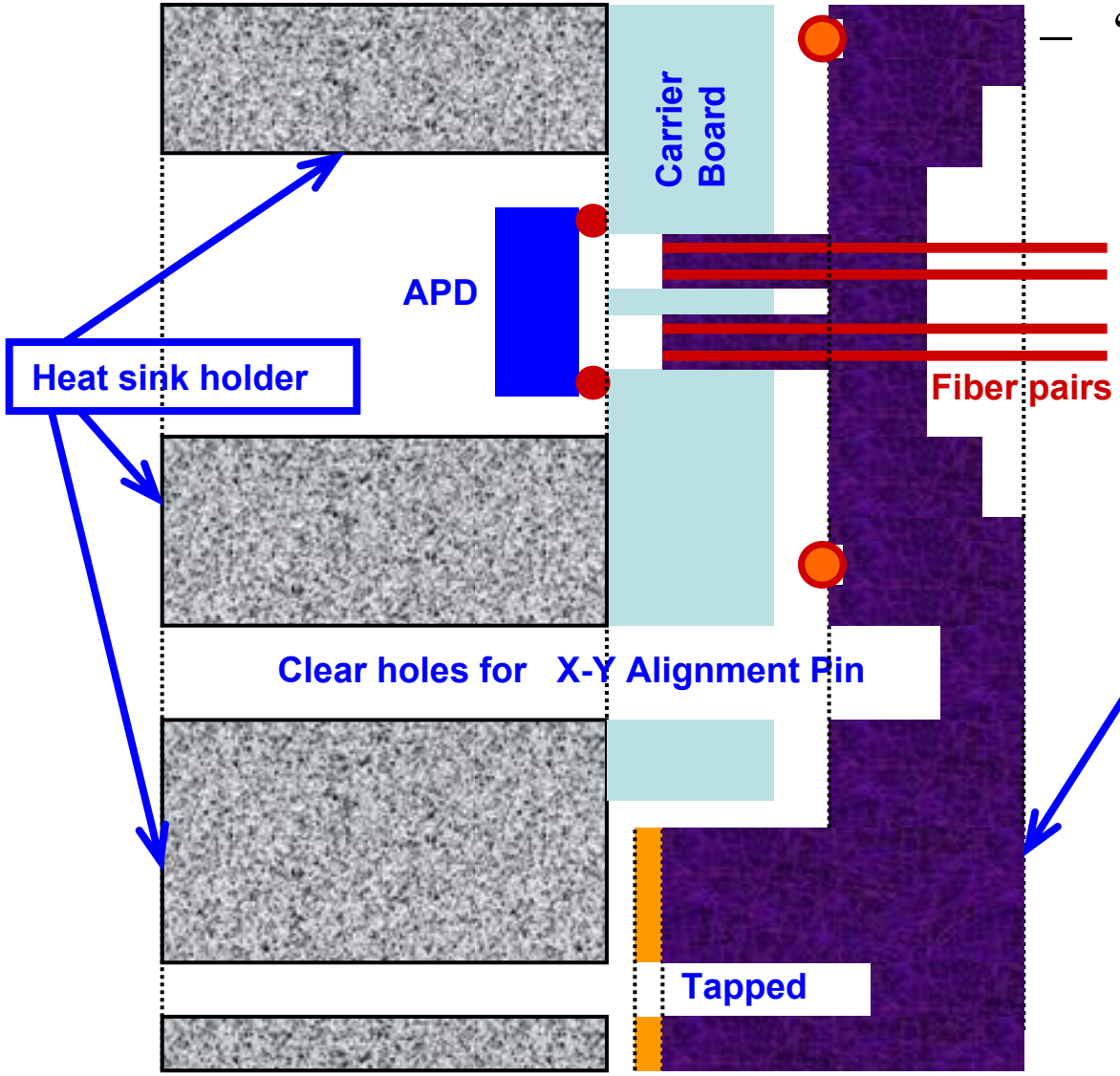

– "Clam-shell" design

- **APD mounted on Carrier Board by Hamamatsu**
  - **'flip chip' bump bond process: active side of APD array is face down**
  - **slots in board will allow fiber ends in optical connector to access APD pixels**
- **Heat sink holder**
  - **glued to carrier board**
- **Optical Connector**
  - **fiber end alignment in transverse (X-Y) direction achieved with dowel pins**

APD Module Design Concept

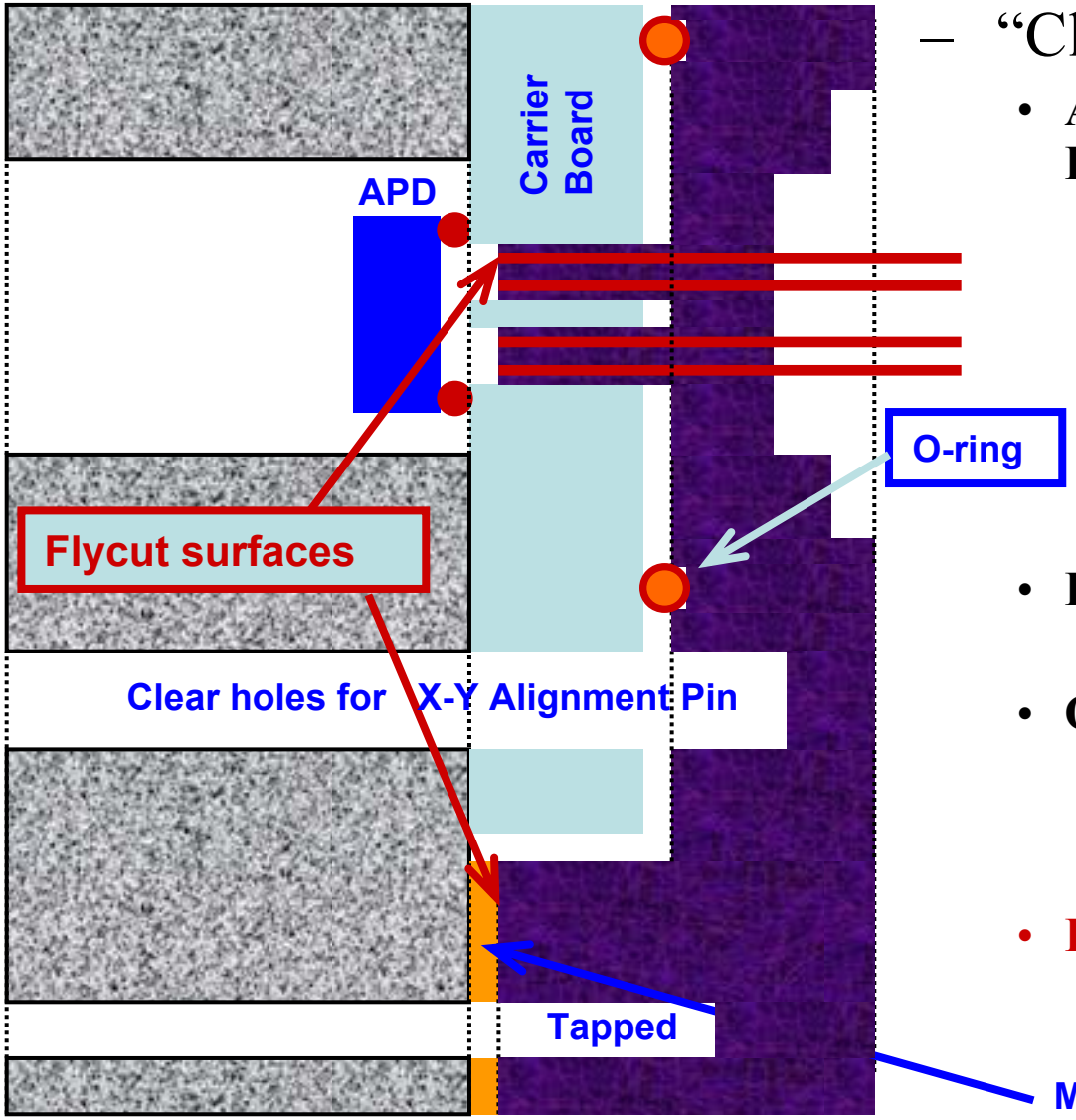

- "Clam-shell" design
  - **APD mounted on Carrier Board by Hamamatsu**
    - **'flip chip' bump bond process: active side of APD array is face down**
    - **slots in board will allow fiber ends in optical connector to access APD pixels**
  - **Heat sink holder**
    - **glued to carrier board**
  - **Optical Connector**
    - **fiber end alignment in transverse (X-Y) direction achieved with dowel pins**
  - **Flycut Surfaces on Opt. Conn.**
    - **allow alignment in Z**

APD Module Design Concept

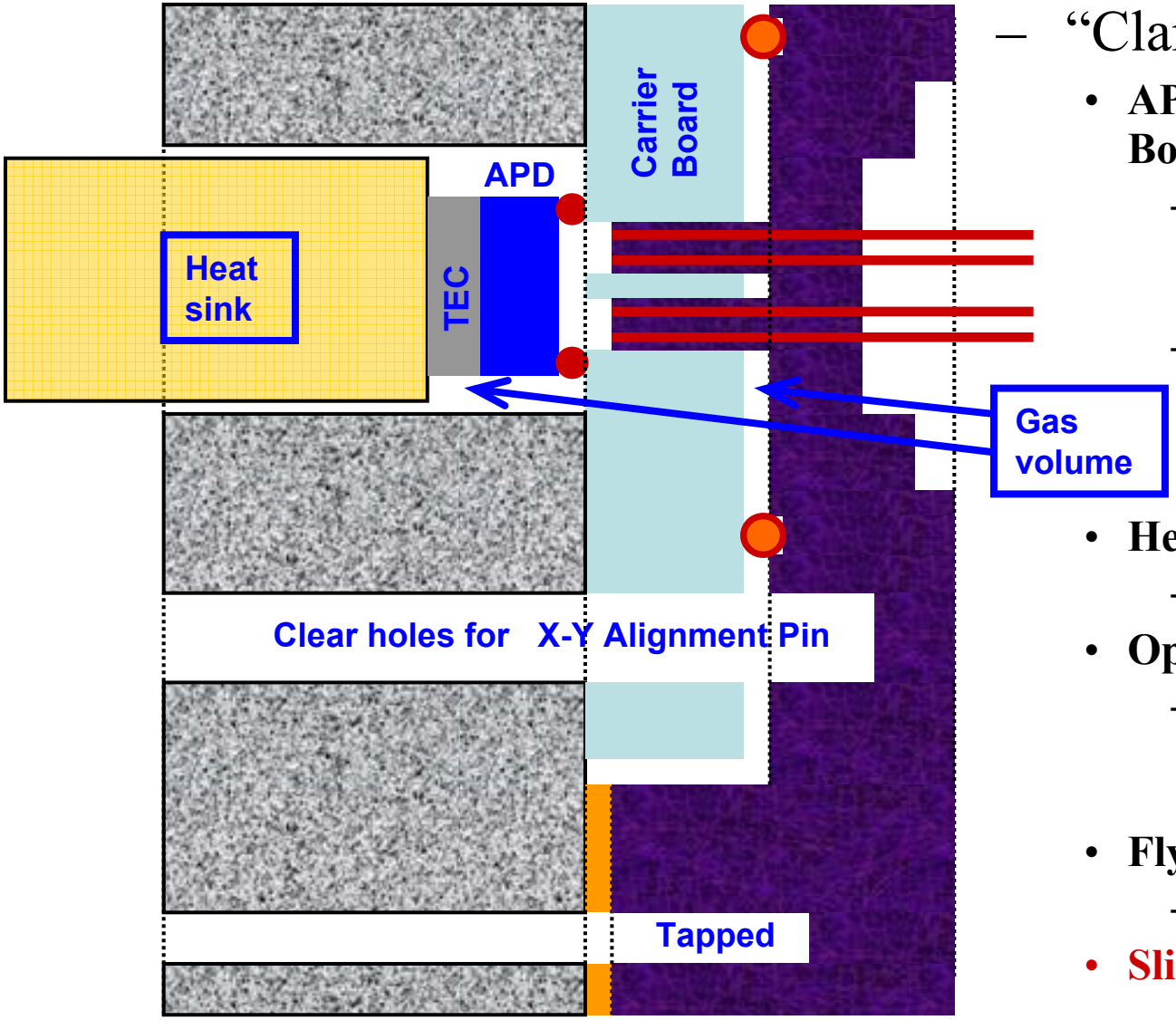

- "Clam-shell" design
  - **APD mounted on Carrier Board by Hamamatsu**
    - **'flip chip' bump bond process: active side of APD array is face down**
    - **slots in board will allow fiber ends in optical connector to access APD pixels**
  - **Heat sink holder**
    - **glued to carrier board**
  - **Optical Connector**
    - **fiber end alignment in transverse (X-Y) direction achieved with dowel pins**
  - **Flycut Surfaces on Opt. Conn.**
    - **allow alignment in Z**
  - **Slide in heatsink/TEC ass'y**
    - **APD now fully isolated**

Complete System Design

Optical conn. + APD Module + Electronics Box (layout by Walt Fox, IU)

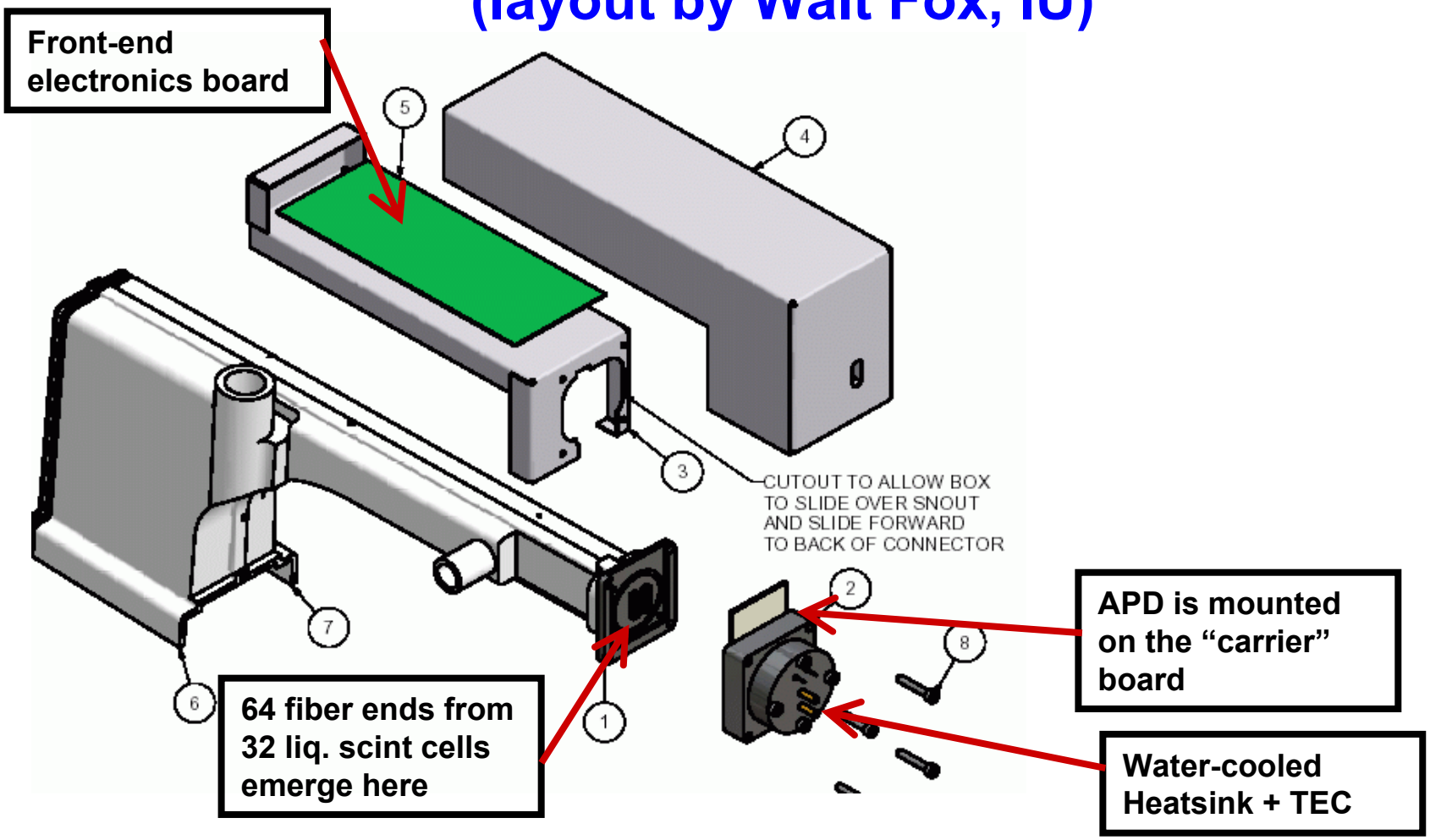

Production Plans - Parts

- Key parts of APD Module are custom pieces
  1) **Optical Connector (covered by WBS 2.5)** -- **injection molded**
  2) **Heat Sink Holder & Heat Sink Cap** -- **injection molded**
  3) **Custom TEC's (*e.g.*, lead arrangement)** -- **cmmercial part.**
  4) **Heat Sink Cup (anodized aluminum or brass)** -- **screw machine**
  5) **Retainer Frame (to clamp APD module to OC)** -- **sheet metal**

- Comments:
  - **Parts are straightforward to fabricate.**
  - **We do not anticipate long lead times for any part.**
  - **IPND will be pilot production run.**

Production - Assembly Steps

- Assemble Heat Sink & Cap w/ connections for water & leak test
- Prepare & Test TEC's
- Assemble Heat Sink / TEC / thermal pad stack:
- Glue Carrier Board/APD assembly to Heat Sink Holder:
- Insert Heat Sink/TEC stack to Heat Sink Holder/Carrier Board/APD:
- Component testing -

  Pressure test assembly

  Operating temperature

  Operating Voltage for M = 100

  Thermistor setting.

Timeline

- ***IPND***

  APD Module

  -- prototype and test current module design -- summer '07

  -- procure parts for IPND -- fall '07

  -- assemble / test -- winter/spring '08

- ***Then production for full Far & Near detectors***

  1) **Iteration on design** ***-- spring/summer '08***

  2) **Production** ***-- through spring '11***